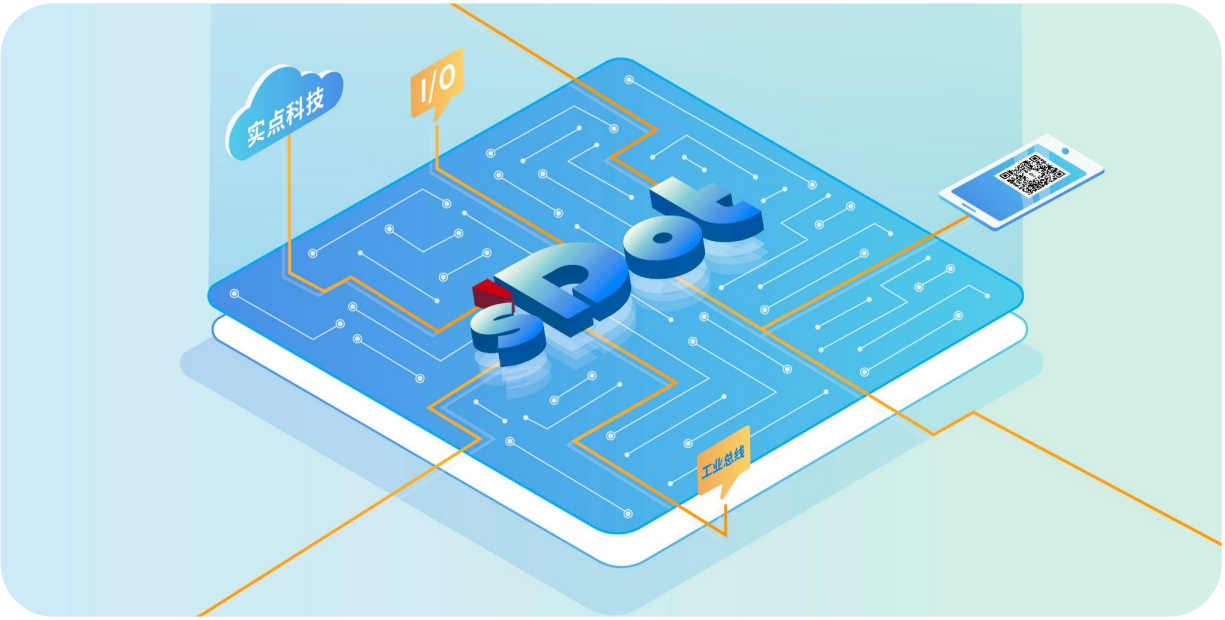

CC-Link IE TSN

XB6S Series Slice I/O

User Manual

Nanjing Solidot Electronic Technology Co., Ltd.

Trademark Notice

sDot and other Solidot trademarks are trademarks of Nanjing Solidot Electronic Technology Co., Ltd.

All other trademarks or registered trademarks mentioned in this document are the property of their respective owners.

Notice

The products, services or features you purchase are subject to the commercial contracts and terms of Solidot Company. All or part of the products, services or features described in this document may not be within the scope of your purchase or use. Unless otherwise agreed in the contract, Solidot Company does not make any express or implied statements or warranties regarding the contents of this document.
Due to product version upgrades or other reasons, the content of this document will be updated from time to time. Unless otherwise agreed, this document is only used as a guide, and all statements, information and suggestions in this document do not constitute any express or implied warranty.

Nanjing Solidot Electronic Technology Co., Ltd.
Address: 11th Floor, Ang Ying Building, No. 91 Shengli Road, Jiangning District, Nanjing, Jiangsu Province
Zip code: 211106
Tel: 4007788929
Website:http://www.solidotech.com

Table of contents

1 Product Overview

1.1 Product Introduction

XB6S series plug-in I/O modules adopt the structure of a combination of couplers and I/O modules. The coupler connects the expandable I/O modules to the real-time industrial Ethernet system. The backplane adopts the X-bus, and the coupler module is responsible for fieldbus communication, thus realizing the function of real-time data exchange between various I/O modules and couplers/controllers.

The XB6S series plug-in I/O modules are rich in variety and have high real-time performance, providing users with guarantees for high-speed data acquisition, optimized system configuration, simplified on-site wiring, and improved system reliability.

1.2 Product Features

- **Occupies fewer nodes**
  A node consists of a bus coupler, 1 to 32 XB6S series I/O modules, 1 to 32 XBF series expansion I/O modules, and a end cap.
- **Rich functional expansion**
  It supports flexible expansion and has a full range of I/O types. It can integrate a variety of digital modules, analog modules, analog I/O module compatible with both current and voltage and temperature modules to meet the needs of different application scenarios.
- **Flexible configuration**
  Various types of plug-in I/O modules can be combined arbitrarily.
- **Strong compatibility**
  The coupler communication interface complies with communication standards and supports mainstream master stations.
- **Small size**
  Compact structure and small space occupation.
- **Easy diagnosis**
  The indicator lights are fully designed, the module status is clear at a glance, and detection and maintenance are convenient.

- **Fast speed**
  The backplane uses X-bus: the minimum scanning cycle is 200us and the typical value is 1ms.
- **Easy to install**
  DIN 35 mm standard rail installation.
  It adopts spring-type terminal blocks, making wiring convenient and quick.

1.3 Application

The coupler module is connected to the controller at the application site, and the I/O module is responsible for connecting to the input and output sensors at the application site. The general process of data collection and processing control is as follows:

a. The input I/O module collects various signals on site and sends them to the coupler via the internal bus;
b. The controller reads and processes the data from the coupler via the fieldbus or industrial Ethernet, and then writes the output data into the coupler;
c. The coupler then writes the output data to the output I/O module through the internal bus, thereby realizing the control of the device.

The expandable I/O modules include digital input module, digital output module, digital input and output module, analog input module, analog output module, temperature module, etc.

Application: The application method adopts the combination of modules such as coupler, digital quantity, analog quantity, temperature, and extended power supply.

Application configuration: According to the requirements of master station access capability, number of sites, I/O points, function type, etc., it can adapt to different types of I/O module combination configurations.

Configuration rules: The modules from left to right are coupler module, power module, I/O module, end cap (mandatory), etc.

The product adopts the application mode of the combination of coupler, I/O module and end cap, and there are two combinations as follows.

Product combination 1 (coupler module, I/O module, end cap)

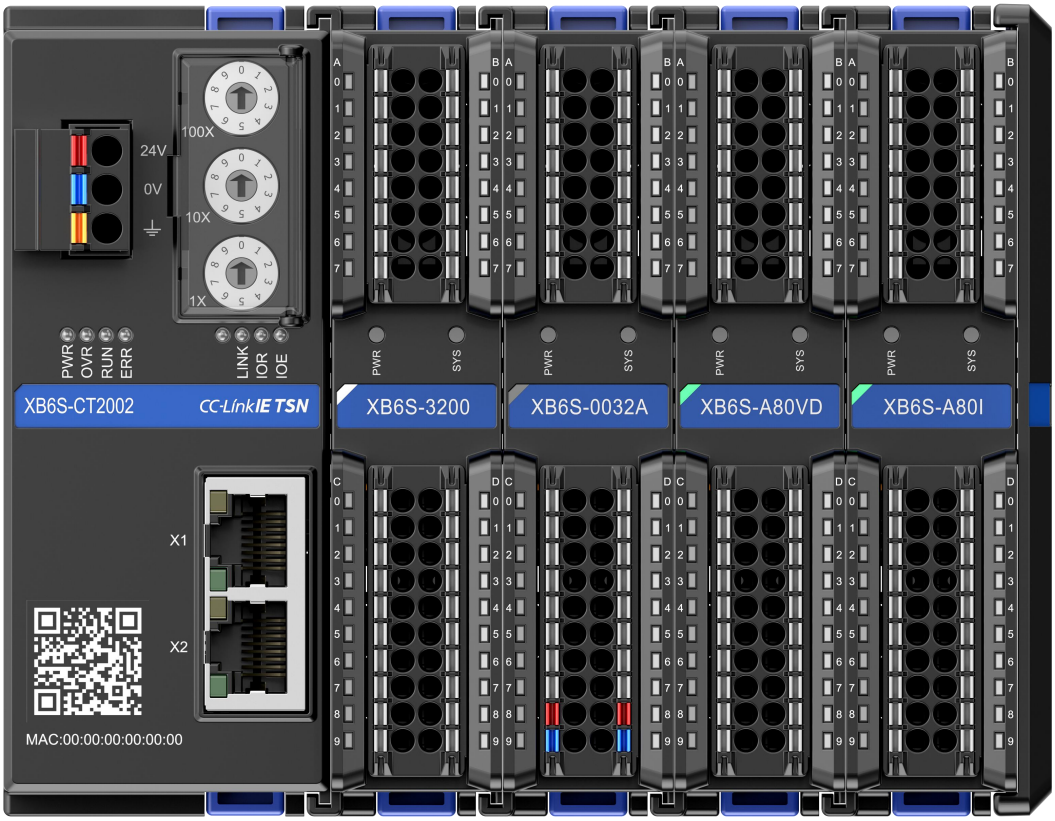

Product combination 2 (coupler module, I/O module, expansion power module, I/O module, end cap)

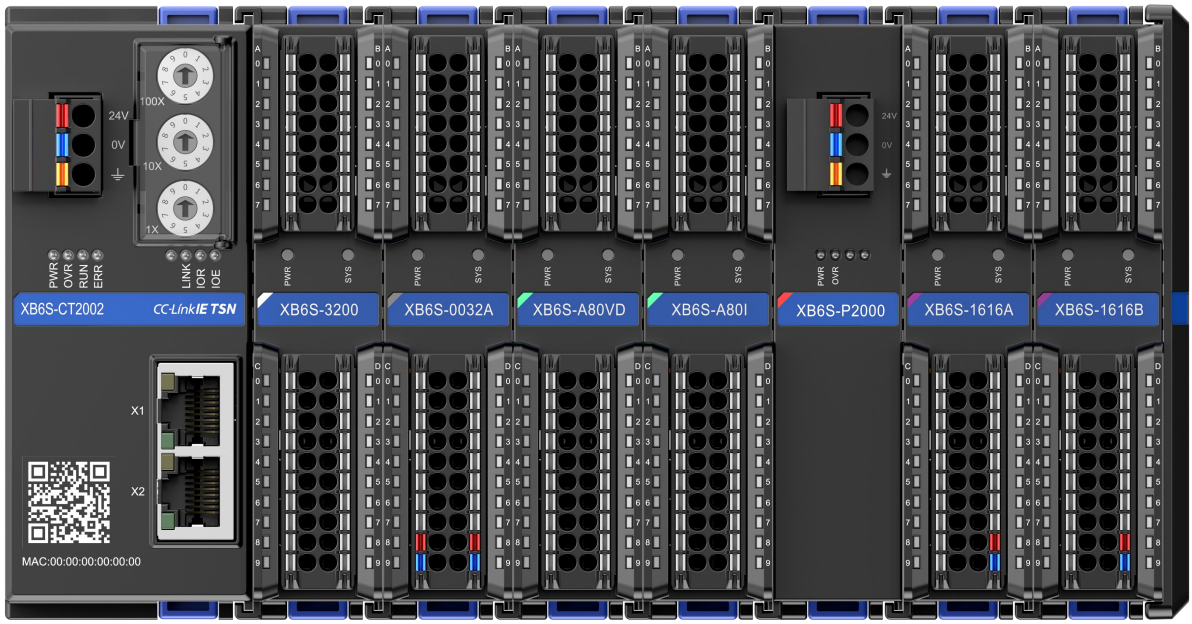

2 Naming convention

2.1 Naming convention

2.1.1 Coupler naming convention

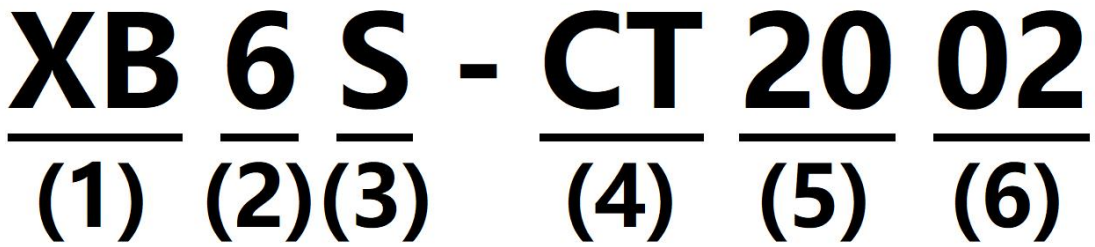

serial number	meaning	Value Description
(1)	Bus Type	XB: X-bus
(2)	Product range	6: Insert type
(3)	Product Version	S: Strengthen, an upgraded version
(4)	Bus protocol	CT: CC-Link IE TSN EC: EtherCAT PN: PROFINET
(5)	Power	20:2A
(6)	Number of network ports	02: Dual network ports

2.1.2 I/O module naming convention

XB 6 S - A 8 0 V

(1) (2)(3) (4) (5)(6)(7)

<table>
<tr><th>serial number</th><th>meaning</th><th colspan="6">Value Description</th></tr>
<tr><td>(1)</td><td>Bus Type</td><td colspan="6">XB: X-bus</td></tr>
<tr><td>(2)</td><td>Product range</td><td colspan="6">6: Insert type</td></tr>
<tr><td>(3)</td><td>Product Version</td><td colspan="6">S is for Strengthen, an upgraded version</td></tr>
<tr><td>(4)</td><td>I/O module types</td><td colspan="6">A: Analog
Default: Digital</td></tr>
<tr><td>(5)</td><td>Input signal points</td><td colspan="6">Analog: 0, 4, 8
Digital: 00, 08, 16, 32</td></tr>
<tr><td>(6)</td><td>Output signal points</td><td colspan="6">Analog: 0, 4, 8
Digital: 00, 08, 16, 32</td></tr>
<tr><td rowspan="10">(7)</td><td rowspan="10">Input and output characteristics</td><td colspan="4">Digital</td><td colspan="2">Analog</td></tr>
<tr><td>coding</td><td>Input</td><td>Output</td><td>Connector Type</td><td>coding</td><td>illustrate</td></tr>
<tr><td>A</td><td rowspan="4">NPN/PNP compatible</td><td>NPN</td><td>/</td><td rowspan="2">V</td><td rowspan="2">Single-ended signal, adjustable range: Disable, -10V~+10V, 0V~10V, -5V~+5V, 0V~5V, 1V~5V</td></tr>
<tr><td>B</td><td>PNP</td><td>/</td></tr>
<tr><td>N</td><td>/</td><td rowspan="3">MIL Connectors</td><td rowspan="3">VD</td><td rowspan="3">Differential signal, adjustable range: Disable, -10V~+10V, 0V~10V, -5V~+5V, 0V~5V, 1V~5V</td></tr>
<tr><td>AN</td><td>NPN</td></tr>
<tr><td>BN</td><td>PNP</td></tr>
<tr><td>Default</td><td>NPN/PNP compatible</td><td colspan="2">/</td><td>I</td><td>Single-ended signal, adjustable range: Disable, 4mA~20mA, 0mA~20mA</td></tr>
<tr><td rowspan="2">J</td><td rowspan="2">/</td><td colspan="2" rowspan="2">Relay</td><td>ID</td><td>Differential signal, adjustable range: Disable, 4mA~20mA, 0mA~20mA, -20mA~+20mA</td></tr>
<tr><td>Default</td><td>Single-ended signal, Analog I/O Module Compatible with Both</td></tr>
</table>

						Current and Voltage
					TM	Temperature collection of thermal resistors, thermocouples, etc.

2.2 Module List

Model	Product Description	
XB6S-CT2002	CC-Link IE TSN Bus Coupler modules	
XB6S-3200	32-channel digital input module, input NPN/PNP compatible, input filter default 3ms	
XB6S-1600	16-channel digital input module, input NPN/PNP compatible, input filter default 3ms	
XB6S-0800	8-channel digital input module, input NPN/PNP compatible, input filter default 3ms	
XB6S-1616A	16-channel digital input and 16-channel digital output module Input NPN/PNP compatible, input filter default 3ms, output NPN type	
XB6S-1616B	16-channel digital input and 16-channel digital output module Input NPN/PNP compatible, input filter default 3ms, output PNP type	
XB6S-0032A	32-channel digital output module, output NPN type	
XB6S-0032B	32-channel digital output module, output PNP type	
XB6S-0016A	16-channel digital output module, output NPN type	
XB6S-0016B	16-channel digital output module, output PNP type	
XB6S-0008A	8-channel digital output module, output NPN type	
XB6S-0008B	8-channel digital output module, output PNP type	
XB6S-3200N	32-channel digital input module, input NPN/PNP compatible, input filter default 3ms, MIL connector type	
XB6S-0032AN	32-channel digital output module, output NPN type, MIL connector type	
XB6S-0032BN	32-channel digital output module, output PNP type, MIL connector type	
XB6S-0012J/6	12-channel relay output module (Note: the "/" in the model number can be omitted, that is, XB6S-0012J/6 and XB6S-0012J6 are the same module)	
XB6S-A80VD	8-channel analog voltage input module	Differential signal, adjustable range: Disable, -10V~+10V, 0V~10V, -5V~+5V, 0V~5V, 1V~5V
XB6S-A80V	8-channel analog voltage input module	Single-ended signal, adjustable range: Disable, -10V~+10V, 0V~10V, -5V~+5V, 0V~5V, 1V~5V
XB6S-A40VD	4-channel analog voltage input module	Differential signal, adjustable range: Disable, -10V~+10V, 0V~10V, -5V~+5V, 0V~5V, 1V~5V
XB6S-A40V	4-channel analog voltage input module	Single-ended signal, adjustable range: Disable, -10V~+10V, 0V~10V, -5V~+5V, 0V~5V, 1V~5V
XB6S-A80ID	8-channel analog current input module	Differential signal, adjustable range: Disable, 4mA~20mA, 0mA~20mA, -20mA~+20mA
XB6S-A80I	8-channel analog current input module	Single-ended signal, adjustable range: Disable, 4mA~20mA, 0mA~20mA
XB6S-A40ID	4-channel analog current	Differential signal, adjustable range: Disable,

	input module	4mA~20mA, 0mA~20mA, -20mA~+20mA
XB6S-A40I	4-channel analog current input module	Single-ended signal, adjustable range: Disable, 4mA~20mA, 0mA~20mA
XB6S-A08V	8-channel analog voltage output module	Single-ended signal, adjustable range: Disable, -10V~+10V, 0V~10V, -5V~+5V, 0V~5V, 1V~5V
XB6S-A04V	4-channel analog voltage output module	Single-ended signal, adjustable range: Disable, -10V~+10V, 0V~10V, -5V~+5V, 0V~5V, 1V~5V
XB6S-A08I	8-channel analog current output module	Single-ended signal, adjustable range: Disable, 4mA~20mA, 0mA~20mA
XB6S-A04I	4-channel analog current output module	Single-ended signal, adjustable range: Disable, 4mA~20mA, 0mA~20mA
XB6S-A80	8-Channel Analog Input Module with Dual-Signal (Current & Voltage) Compatibility	Single-ended signal, adjustable range: Disable、0mA~20mA、4mA~20mA、-20mA~+20mA、-10V~+10V、0V~10V、-5V~+5V、0V~5V、1V~5V
XB6S-A40	4-Channel Analog Input Module with Dual-Signal (Current & Voltage) Compatibility	
XB6S-A08	8-Channel Analog Output Module with Dual-Signal (Current & Voltage) Compatibility	Single-ended signal, adjustable range: Disable、0mA~20mA、4mA~20mA、-10V~+10V、0V~10V、-5V~+5V、0V~5V、1V~5V
XB6S-A04	4-Channel Analog Output Module with Dual-Signal (Current & Voltage) Compatibility	
XB6S-A80TM	8-channel thermal resistor and thermocouple temperature acquisition module (for module introduction, please refer to the official website module user manual)	
XB6S-A40TM	4-channel thermal resistor and thermocouple temperature acquisition module (for module introduction, please refer to the official website module user manual)	
XB6S-PL20	2-channel single-ended incremental encoder counting module (for module introduction, please refer to the official website module user manual)	
XB6S-PS20D	2-channel SSI absolute encoder counting module (for module introduction, please refer to the official website module user manual)	
XB6S-PL20D	2-channel differential incremental encoder counting module (for module introduction, please refer to the official website module user manual)	
XB6S-PC80	8-channel pulse counting module (For module introduction, please refer to the official website module user manual)	
XB6S-PT04A	4-channel PTO pulse output module (for module introduction, please refer to the official website module user manual)	
XB6S-C01SP	1-channel serial communication module (For module introduction, please refer to the official website module user manual)	
XB6S-P2000	Extension power module	
XB6S-C18_2	Common terminal expansion module	
XB6S-CVR00	End cap	

3 Module Introduction

3.1 CC-Link IE TSN Coupler

3.1.1 Panel structure

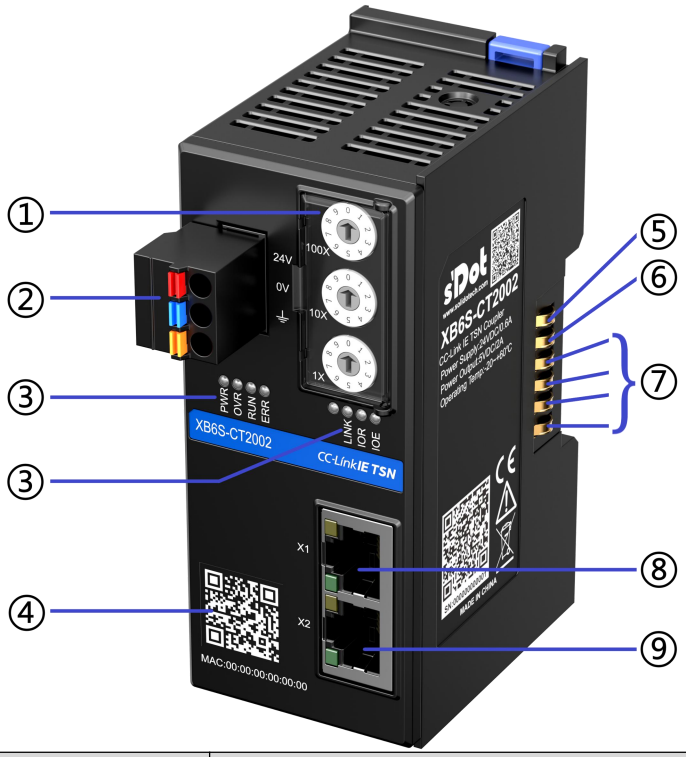

serial number	name	illustrate
①	Rotary Switch	Set IP address
②	Power Terminal Blocks	3P spring-loaded terminal blocks
③	Module indicators and indicator light identification	Indicates coupler power status and system operation status
④	Module QR code	Scan the code to get module related information
⑤	Power+	5V

⑥	power supply-	0V
⑦	X-bus communication signal	Communication signal
⑧	Bus interface X1	RJ45 interface
⑨	Bus interface X2	RJ45 interface

3.1.2 Indicator light function

CC-Link IE TSN Coupler Indicator Light Definition				
Logo	**name**	**color**	**state**	**Status description**
PWR	Power indicator	green	Always on	The module power supply is working properly
			Off	The module is not powered or the power supply is abnormal.
OVR	Overload indicator light	red	Always on	The load reaches more than 90% (±5%)
			Off	Not overloaded
RUN	Operation status indicator	green	Always on	The system is running normally
			Off	A serious error has occurred
ERR	System abnormality indicator	red	Always on	An unrecoverable critical error occurred on the device
			Off	The module works fine
LINK	Network status indicator	green	Always on	Data interaction establishment
			Flashing 1Hz	Data exchange stopped
			Off	No data interaction
IOR	IO communication indicator	green	Always on	I/OProcess data has been established
			Flashing 1Hz	No business data interaction
			Flashing 10Hz	Coupler firmware upgrade
IOE	IO abnormal indicator	red	Always on	Communication abnormality
			Off	No abnormality in communication

Network Status Indicator Definition				
Logo	**name**	**color**	**state**	**Status description**
X1	Network status indicator	orange	Flash	The connection is established and data is exchanged
			Off	No data interaction or exception
		green	Always on	Establishing a network connection
			Off	No network connection established or abnormal
X2	Network status indicator	orange	Flash	The connection is established and data is exchanged
			Off	No data interaction or exception
		green	Always on	Establishing a network connection
			Off	No network connection established or abnormal

3.1.3 Rotary Switch

IP address setting

The rotary switch can be used to specify the setting method of the module IP address.

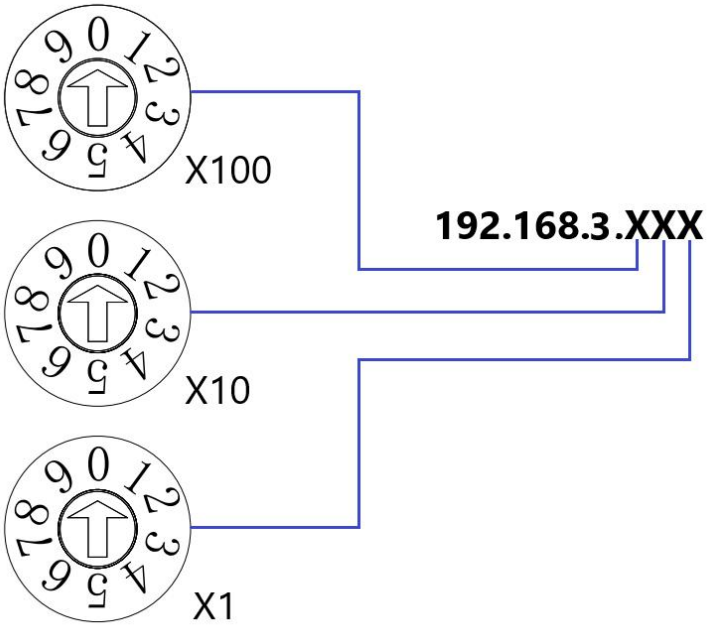

Setting value (decimal)	IP address setting method
001～254	set upThe lower 1 Byte of the IP address. “×100” For hundreds,pass “×10” For ten, through “×1"For the individual positions,Set within the range of 1 to 254.
000, 255～	When the rotary switch is set to 0, 255 or above, the IP address currently used by the module is the IP address last changed by the host computer or the factory IP address.

The rotary switch is set to "000" at the factory, and the IP address is set to the factory IP: 192.168.3.253.

Precautions

1、 Tool selection
Screwdriver specifications: opening ≤3mm.
2、 The rotary switch IP must be set when the power is off. If the IP address needs to be modified during the communication process, the new IP setting must be completed and the power must be turned on again for it to take effect.
3、 When the rotary switch is set to XXX.XXX.X.000, the module IP address can be modified by the PLC or host computer.
4、 When the rotary switch code is manually modified to non-XXX.XXX.X.000, the power is turned off and restarted to take effect, and the module's IP address is based on the module's rotary switch

code. Among the module IP address setting methods, the rotary switch code method has the highest priority.

3.1.4 Product Parameters

3.1.4.1 Interface parameters

CC-Link IE TSN interface parameters		
Bus protocol	CC-Link IE TSN	
Maximum data volume	RX,RY	1024 bits
	RWr，RWw	256 words
Default data volume	RX,RY	32 bits
	RWr，RWw	8 words
Number of slaves	Depends on the master station	
Data transmission medium	Connector (cable + plug) for Ethernet Category 5 (CAT5) according to EN 50173 or ISO/IEC 11801	
Certification Class	Class A/B	
Transfer rate	1Gbps	
Transmission distance	≤100m (station distance)	
Bus interface	2 × RJ45	
Maximum number of modules connected in series	32	

3.1.4.2 Power parameters

Power parameters	
Input voltage	SELV Input 24VDC (18V~36V)
Input Current	Max: 600mA (24VDC)
Backplane supply current	Max: 2A
Backplane supply voltage	5VDC

3.1.4.3 General parameters

General technical parameters		
Specifications and dimensions		106.4 × 43 × 61mm
Weight		160g
Usage Environment	Operating temperature	-20℃~+60℃
	Storage temperature	-40℃~+80℃
	Relative humidity	95%, non-condensing
	Altitude	≤2000m
	Vibration resistance	IEC 60068-2-6Sinusoidal vibration 5Hz~8.4Hz,3.5mm,8.4Hz~150Hz,1g X/Y/ZThree axial,10Cycle/Axial (100min)
	Impact resistance	IEC 60068-2-27Mechanical shock 150m/s2,11ms, ±X/Y/ZSix directions 3Second-rate/Direction, total18Second-rate
	Protection level	IP20
	Overvoltage category	I
	Pollution degree	Level 2
Module abnormality self-recovery		support
Short circuit protection		Support (automatic recovery mechanism)
Reverse polarity protection		Support (automatic recovery mechanism)
Surge protection		support
Online Upgrade		support
Diagnosis		support
Alerts		support
CE certification		EMC EN 61131-2 EN IEC 61000-6-4 EN IEC 61000-6-2
		LVD EN 61010-1:2010/A1 EN IEC 61010-2-201
RoHS Certification		EU Directive 2011/65/EU Annex II

3.1.5 Power wiring diagram

Use a 24VDC power module and refer to the wiring method. Connect the power supply according to the circuit shown in the figure below and ground it reliably (twisted pair cable is recommended for the power cable).

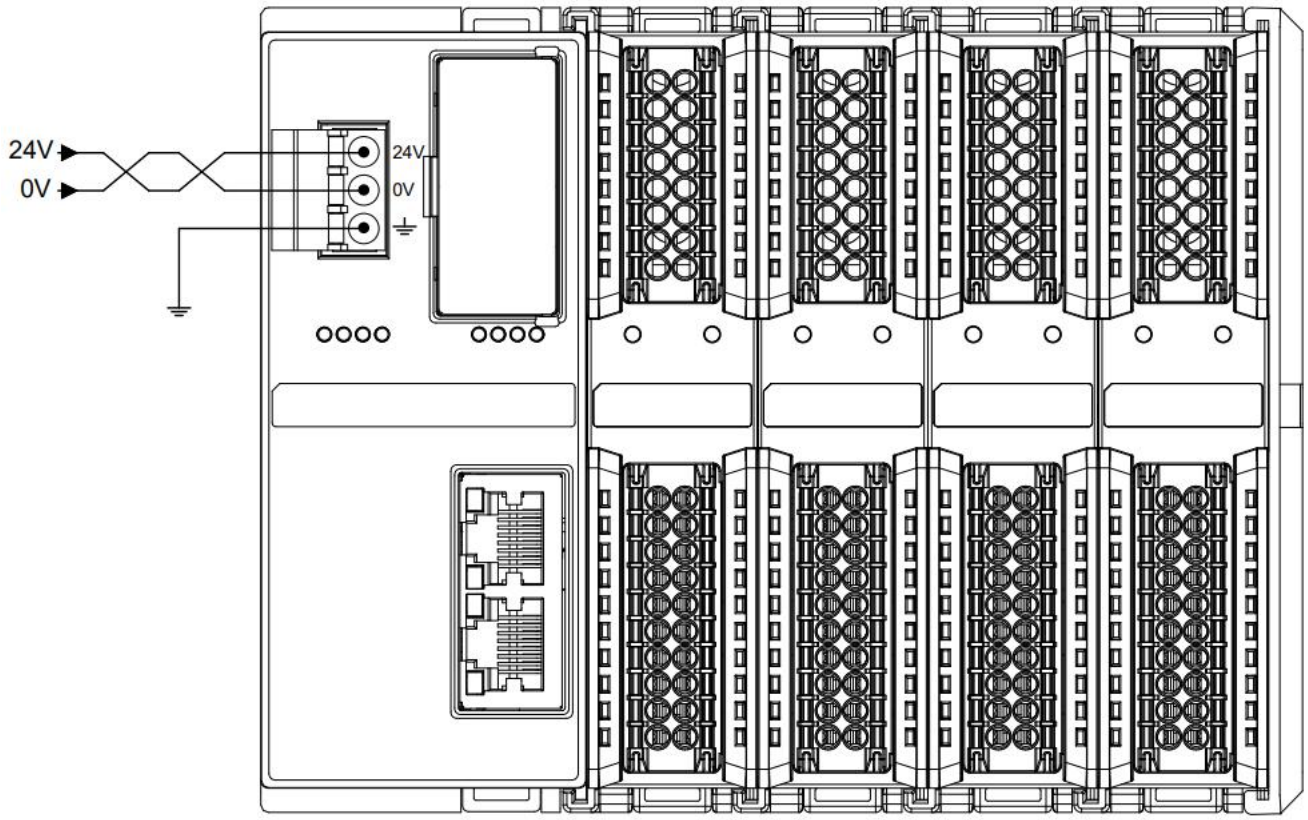

3.1.6 Bus wiring

It uses a standard RJ45 network interface and a standard crystal connector, and the pin assignments are shown in the following table.

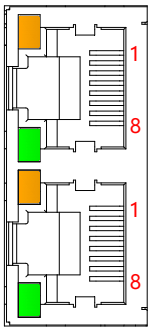

Pin Number	Signal
1	TX_D1+
2	TX_D1-
3	RX_D2+
4	BI_D3+
5	BI_D3-
6	RX_D2 -
7	BI_D4+
8	BI_D4-

☛ Precautions

- It is recommended to use double-shielded (braided mesh + aluminum foil) STP cable of category 5 or higher as communication cable.

- The length of the cable between devices cannot exceed 100m.

3.1.7 Dimensions

Coupler dimensions (mm)

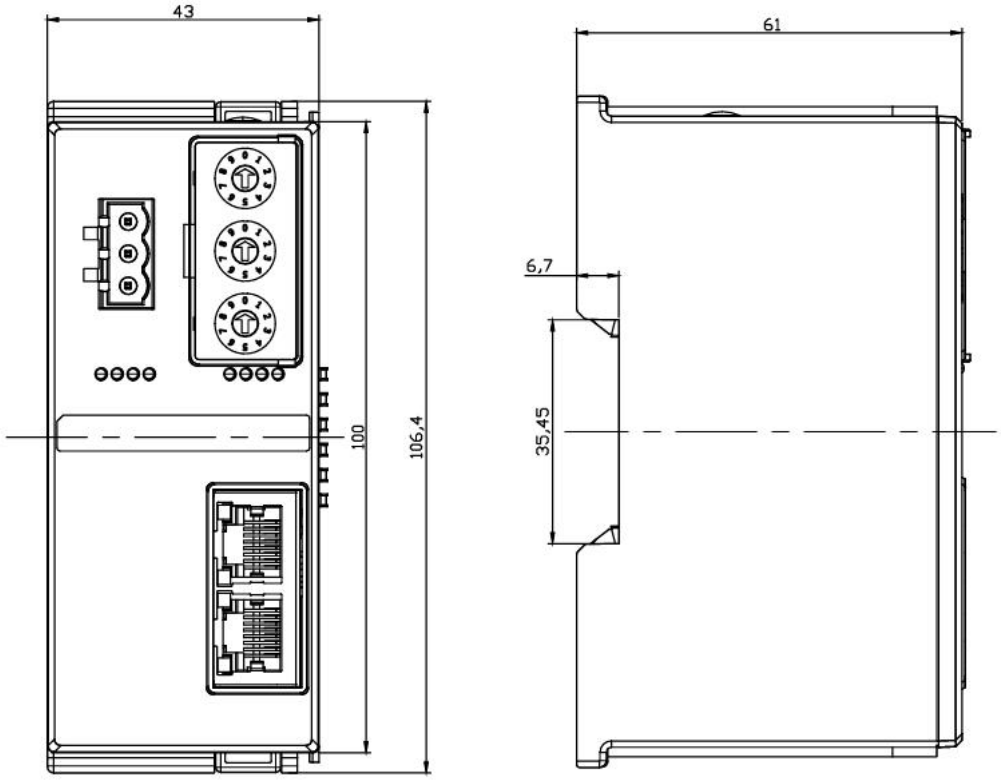

3.2 Digital I/O Modules

3.2.1 Panel structure

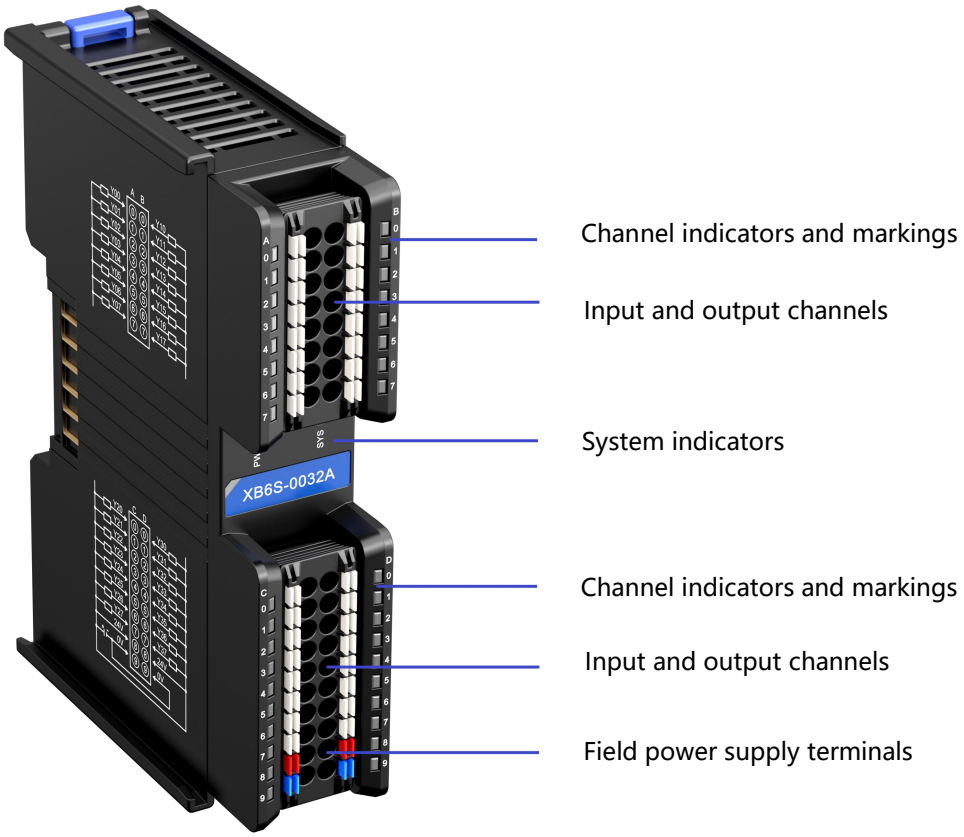

3.2.2 Indicator light function

Digital I/O module indicator light definition				
Logo	**name**	**color**	**state**	**Status description**
PWR	Power indicator	green	Always on	Power supply is normal
			Off	The product is not powered on or the power supply is abnormal
SYS	Operation status indicator	green	Always on	The system is running normally
			Flashing 1Hz	No business data interaction, waiting to establish business data interaction
			Flashing 10Hz	Firmware Upgrade
			Off	System not working
0~7	Input channel indicator	green	Always on	The module channel has signal input
			Off	The module channel has no signal input or the signal input is abnormal
0~7	Output channel indicator	green	Always on	The module channel has signal output
			Off	The module channel has no signal output or

				the signal output is abnormal

3.2.3 Technical Parameters

3.2.3.1 Digital input module parameters

Digital input				
Product Model	XB6S-3200	XB6S-3200N	XB6S-1600	XB6S-0800
Bus input power rated voltage	5VDC (4.5V~5.5V)			
Bus input power rated current	≤100mA	≤70mA	≤80mA	≤60mA
Input rated voltage	24VDC (20.4V~28.8V)			
Typical input current	5mA/ch (24VDC)			
Input signal points	32	32	16	8
Input signal type	NPN/PNP compatible			
Input signal form	Voltage direct input form Sink input: NPN open collector input Source input: PNP open collector input			
OFF voltage/OFF current	-3V~+5V/0.9mA or less			
ON voltage/ON current	11V~30V/2.1mA or more			
Reaction time	<50us			
Input filtering	No filter, 0.1ms, 0.2ms, 0.5ms, 1ms, 2ms, 3ms (factory setting), 4ms...18ms, 19ms, 20ms			
Maximum input frequency	150Hz (filter time: 3ms)			
Input Impedance	5.4KΩ			
Isolation method	Optocoupler Isolation			
Isolation withstand voltage	500VAC			
Rated current consumption	100mA	70mA	80mA	60mA
Power consumption	0.5W	0.35W	0.4W	0.3W
Digital input type	Type1/Type3			
Channel indicator light	Green LED light			

3.2.3.2 Digital input and output module parameters

Digital input		
Product Model	XB6S-1616A	XB6S-1616B
Bus input power rated voltage	5VDC (4.5V~5.5V)	
Bus input power rated current	≤130mA	≤100mA
Input rated voltage	24VDC (20.4V~28.8V)	
Typical input current	5mA/ch (24VDC)	
Input signal points	16	16
Input signal type	NPN/PNP compatible	
Input signal form	Voltage direct input form Sink input: NPN open collector input Source input: PNP open collector input	
OFF voltage/OFF current	-3V~+5V/0.9mA or less	
ON voltage/ON current	11V~30V/2.1mA or more	
Reaction time	<50us	
Input filtering	No filter, 0.1ms, 0.2ms, 0.5ms, 1ms, 2ms, 3ms (factory setting), 4ms...18ms, 19ms, 20ms	
Maximum input frequency	150Hz (filter time: 3ms)	
Input Impedance	5.4KΩ	
Isolation method	Optocoupler Isolation	
Isolation withstand voltage	500VAC	
Rated current consumption	130mA	100mA
Power consumption	0.65W	0.5W
Digital input type	Type1/Type3	
Channel indicator light	Green LED light	
Digital output		
Output signal points	16	16
Output signal type	NPN	PNP
Field side input voltage range	24VDC (20.4V~28.8V)	
Output voltage drop	< 1V	
Output load type	Resistive load, inductive load, lamp load	
Single channel rated current	Max: 0.5A (seeFigure 1)	
Leakage Current	<10uA	

Reaction time	<150us
Output channel protection	Short circuit protection (automatic recovery mechanism)
Module protection	Reverse connection protection (automatic recovery mechanism), field-side surge protection
Isolation method	Optocoupler Isolation
Isolation withstand voltage	500VAC
Channel indicator light	Green LED light

3.2.3.3 Digital output module parameters

Digital output				
Product Model	XB6S-0032A	XB6S-0032B	XB6S-0032AN	XB6S-0032BN
Bus input power rated voltage	5VDC (4.5V~5.5V)			
Bus input power rated current	≤150mA	≤110mA	≤130mA	≤80mA
Field side input voltage range	24VDC (20.4V~28.8V)			
Output signal points	32	32	32	32
Output signal type	NPN	PNP	NPN	PNP
Output voltage drop	< 1V			
Output load type	Resistive load, inductive load, lamp load			
Single channel rated current	Max: 0.5A (seeFigure 1)		Max: 0.1A	
Leakage Current	<10uA			
Reaction time	<150us			
Output channel protection	Short circuit protection (automatic recovery mechanism)			
Module protection	Reverse connection protection (automatic recovery mechanism), field-side surge protection			
Isolation method	Optocoupler Isolation			
Isolation withstand voltage	500VAC			
Rated current consumption	150mA	110mA	130mA	80mA
Power consumption	0.75W	0.55W	0.65W	0.4W
Channel indicator light	Green LED light			

Digital output				
Product Model	XB6S-0008A	XB6S-0008B	XB6S-0016A	XB6S-0016B
Bus input power rated voltage	5VDC (4.5V~5.5V)			
Bus input power rated current	≤70mA	≤60mA	≤110mA	≤90mA
Field side input voltage range	24VDC (20.4V~28.8V)			
Output signal points	8	8	16	16
Output signal type	NPN	PNP	NPN	PNP
Output voltage drop	< 1V			
Output load type	Resistive load, inductive load, lamp load			
Single channel rated	Max: 0.5A (seeFigure 1)			

current				
Leakage Current	<10uA			
Reaction time	<150us			
Output channel protection	Short circuit protection (automatic recovery mechanism)			
Module protection	Reverse connection protection (automatic recovery mechanism), field-side surge protection			
Isolation method	Optocoupler Isolation			
Isolation withstand voltage	500VAC			
Rated current consumption	70mA	60mA	110mA	90mA
Power consumption	0.35W	0.3W	0.55W	0.45W
Channel indicator light	Green LED light			

3.2.3.4 Relay output module parameters

Relay output	
Product Model	XB6S-0012J/6
Bus input power rated voltage	5VDC (4.5V~5.5V)
Bus input power rated current	≤100mA
Field side input voltage range	24VDC (20.4V~28.8V)
Output signal points	12
Output format	Relay
Output load type	Resistive load, inductive load, lamp load
Minimum load current	10mA
Minimum load voltage	5V
Single channel rated voltage	24VDC
Single channel rated current	Max: 2A (seeFigure 2)
Hardware output response time	10ms/10ms
Module protection	Field side reverse connection protection (automatic recovery mechanism), field side surge protection
Isolation method	Optocoupler isolation + relay isolation
Isolation withstand voltage	1500VAC
Rated current consumption	100mA
Power consumption	0.5W
Mechanical life	Minimum 20 million operations (18,000 operations/hour)
Electrical life	Minimum 100,000 operations (2A, 24VDC, inductive load)
Channel indicator light	Green LED light

3.2.3.5 General technical parameters

General technical parameters	
Specifications and dimensions	106.4 × 25.7 × 72.3mm
Weight	32-channel DIO: 110g
	16-channel DIO: 90g
	8-channel DIO: 90g
	XB6S-0012J/6: 135g

Operating temperature	-20℃~+60℃
Storage temperature	-40℃~+80℃
Relative humidity	95%, non-condensing
Altitude	≤2000m
Pollution degree	Level 2
Protection level	IP20
Safety Certification	UL certification, CE certification
Green certification	RoHS certification, REACH certification

Figure 1:

Plot of maximum rated current of a single channel of a digital output module versus temperature

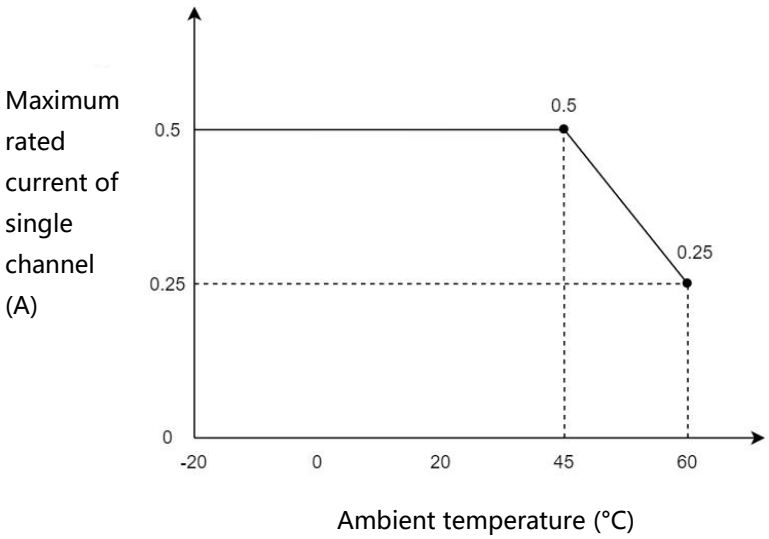

Figure 2:

Plot of maximum rated current of a single channel of a relay output module versus temperature

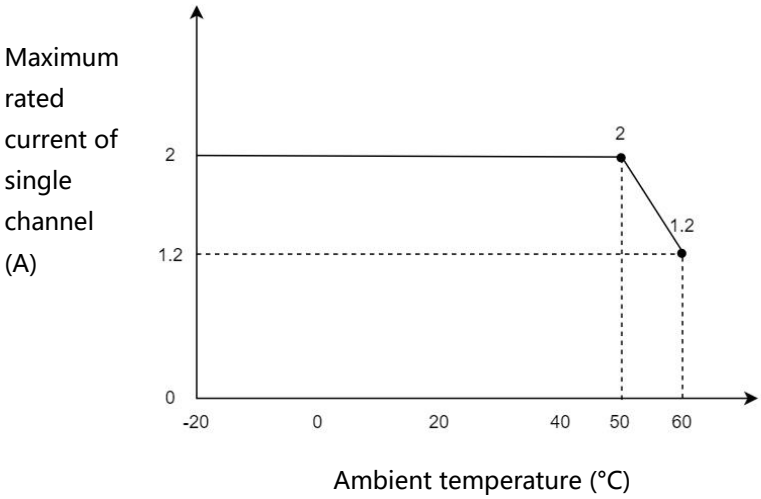

3.2.4 Wiring Diagram

3.2.4.1 XB6S-3200

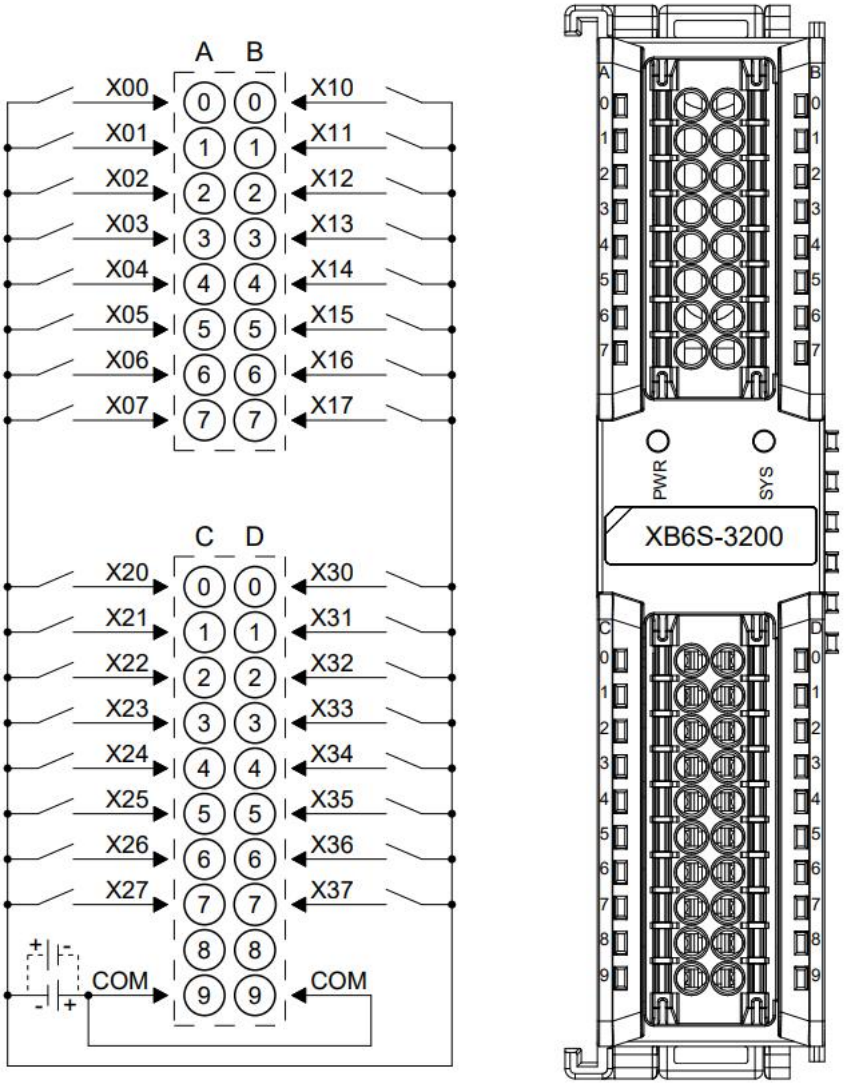

*COM internal conduction; NPN/PNP compatible

3.2.4.2 XB6S-1600

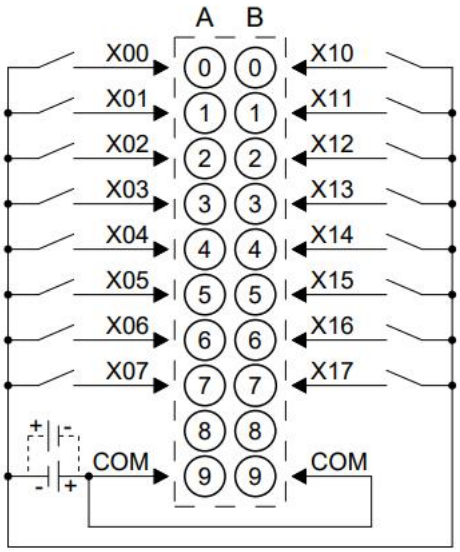

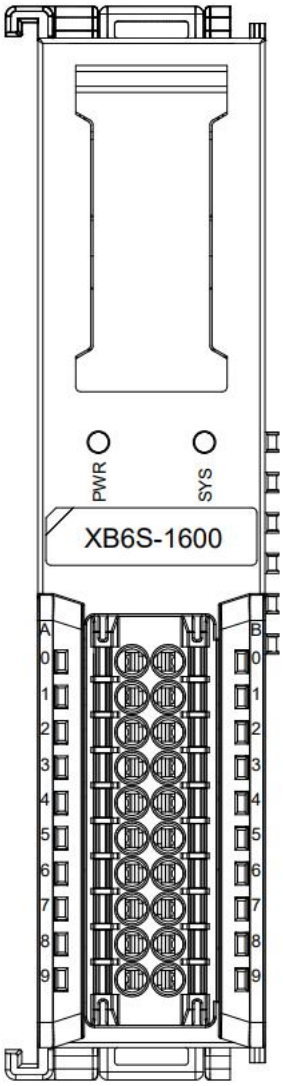

*COM internal conduction; NPN/PNP compatible

3.2.4.3 XB6S-0800

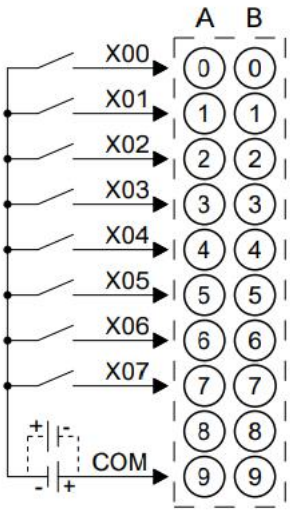

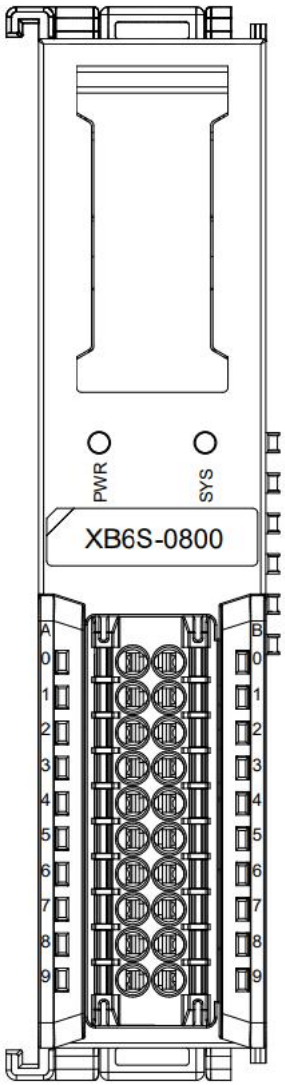

*NPN/PNP compatible

3.2.4.4 XB6S-1616A

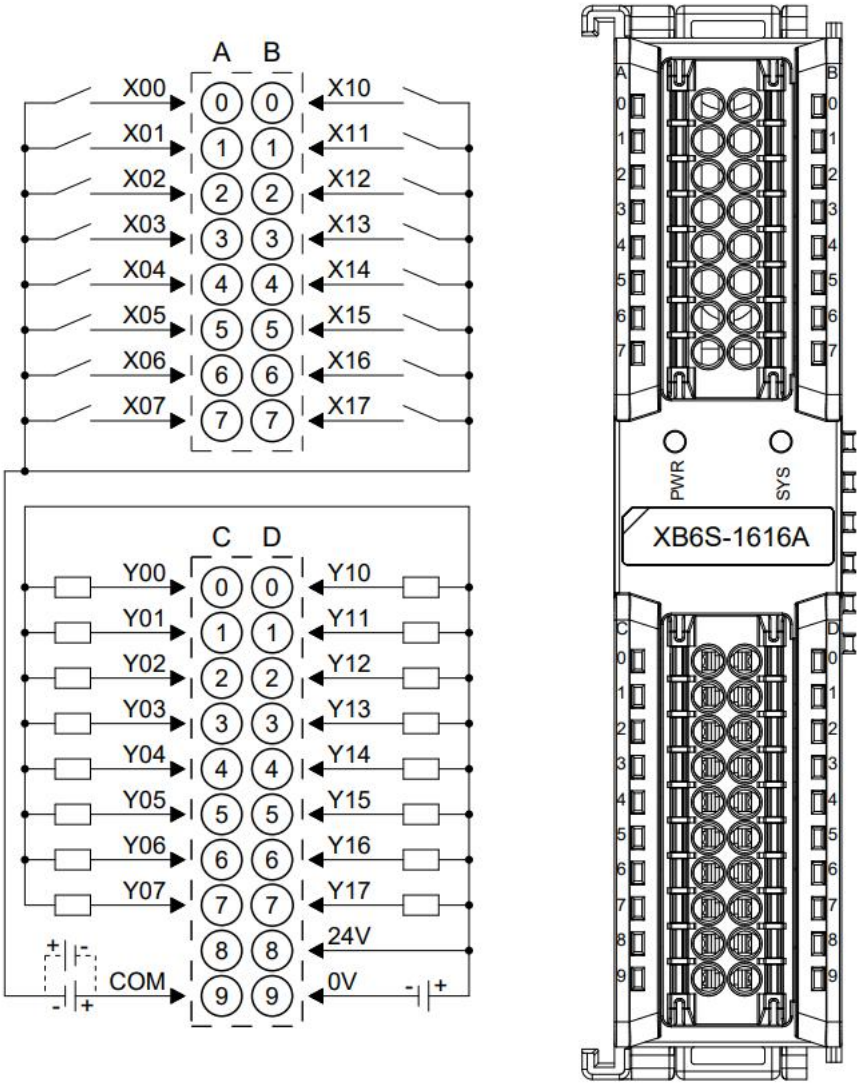

*COM is the common terminal of DI, DI is NPN/PNP compatible, DO is NPN

3.2.4.5 XB6S-1616B

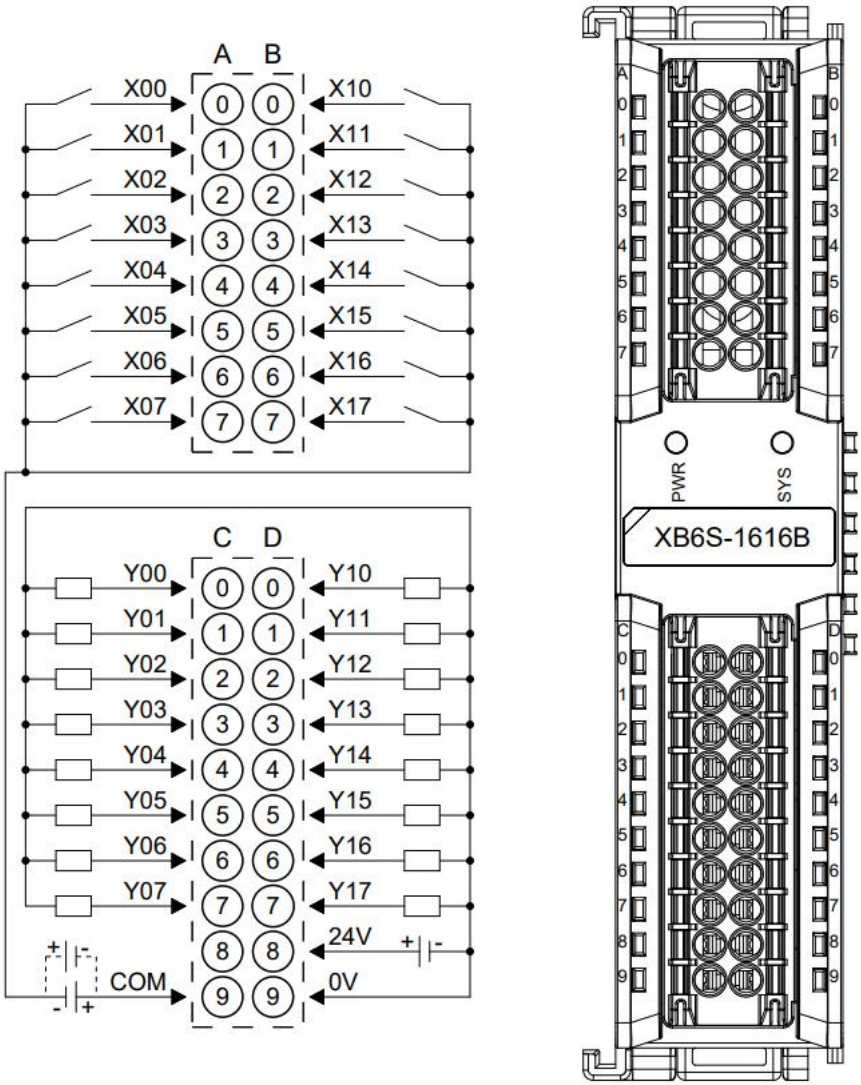

*COM is the common terminal of DI, DI is NPN/PNP compatible, DO is PNP

3.2.4.6 XB6S-0032A

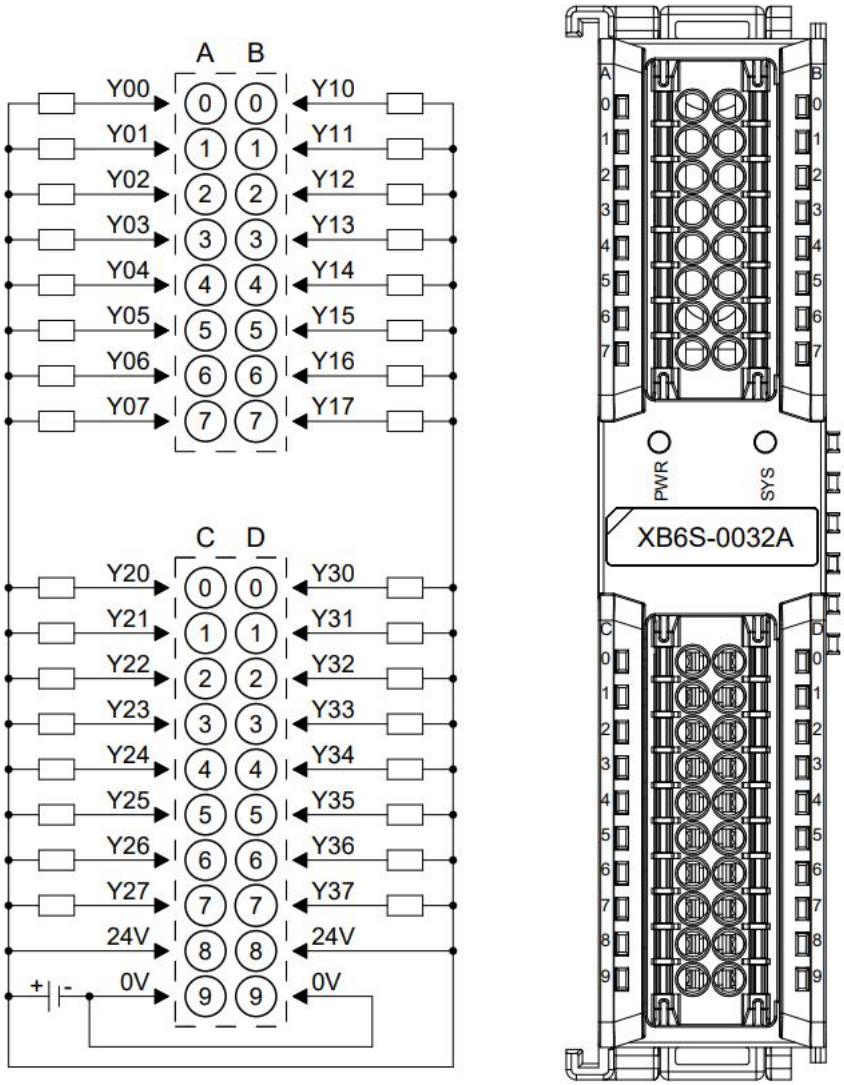

*24V internal conduction; 0V internal conduction

*The load common power supply must use the same power supply as the module

3.2.4.7 XB6S-0032B

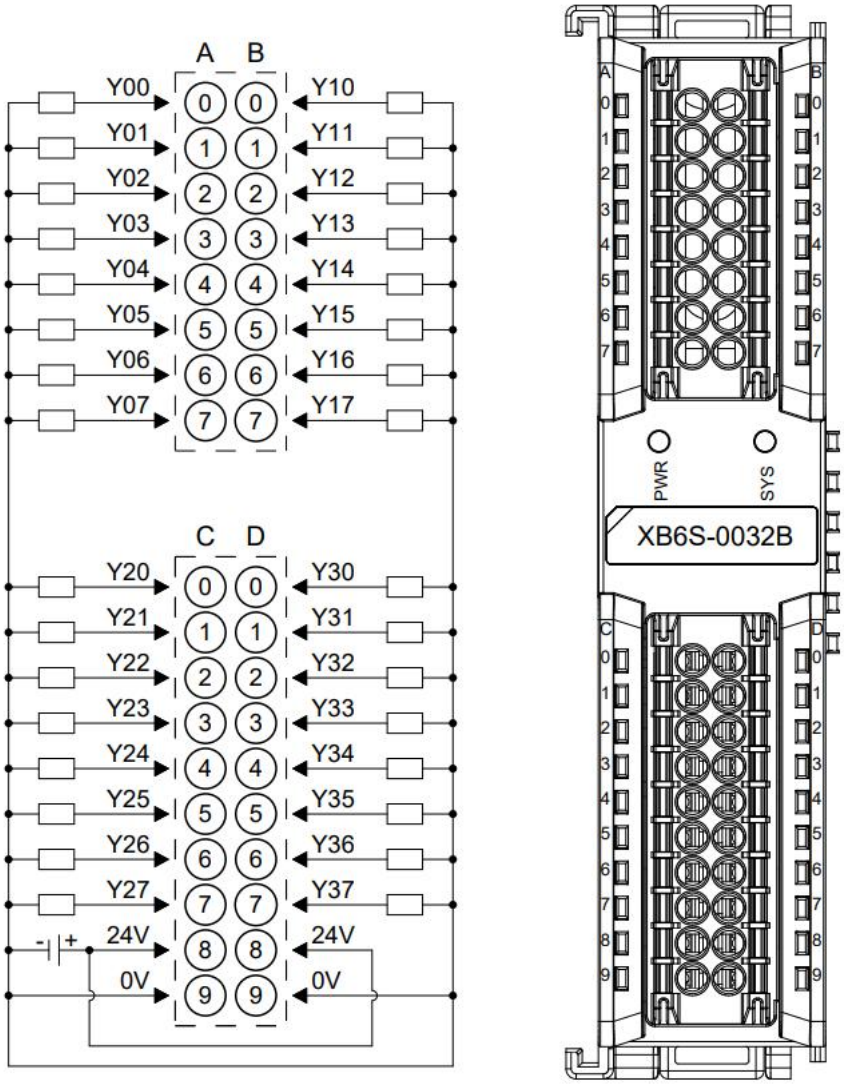

*24V internal conduction; 0V internal conduction

*The load common power supply must use the same power supply as the module

3.2.4.8 XB6S-0016A

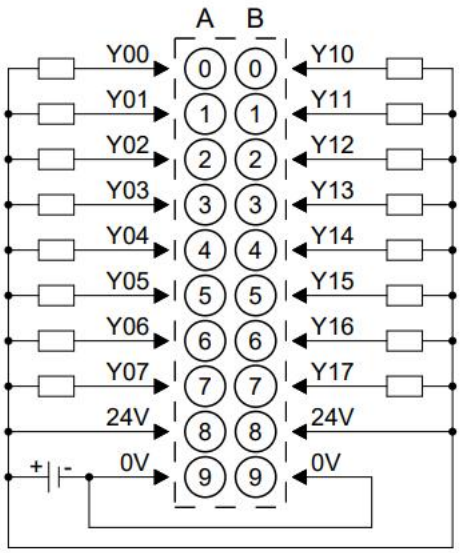

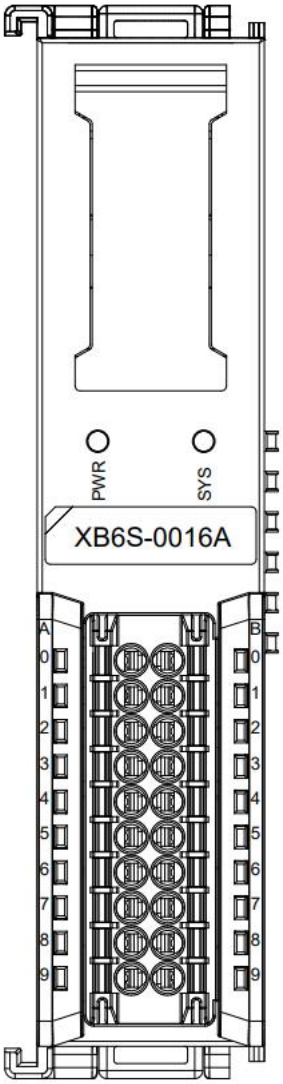

*24V internal conduction; 0V internal conduction

*The load common power supply must use the same power supply as the module

3.2.4.9 XB6S-0016B

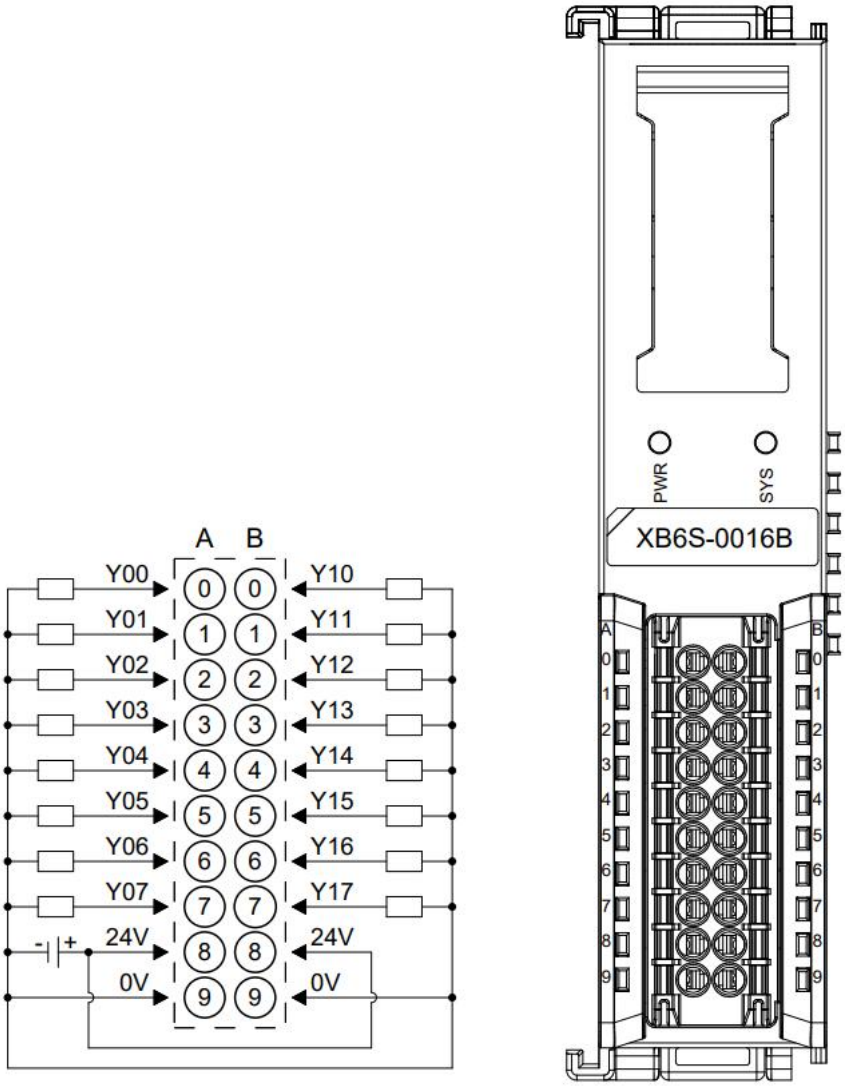

*24V internal conduction; 0V internal conduction

*The load common power supply must use the same power supply as the module

3.2.4.10 XB6S-0008A

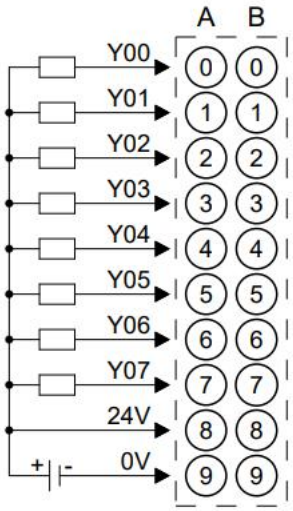

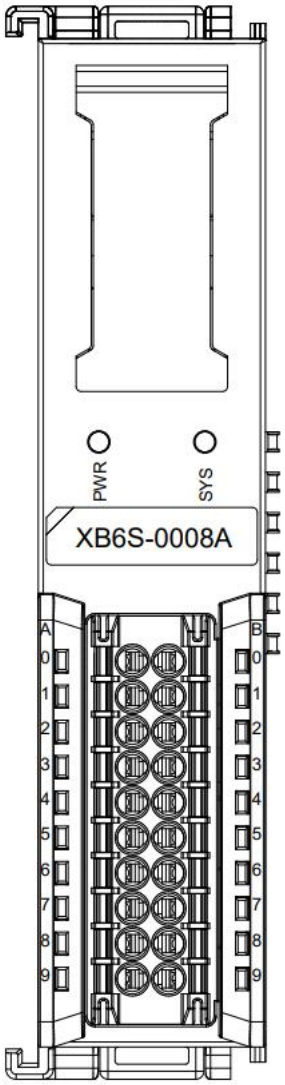

3.2.4.11 XB6S-0008B

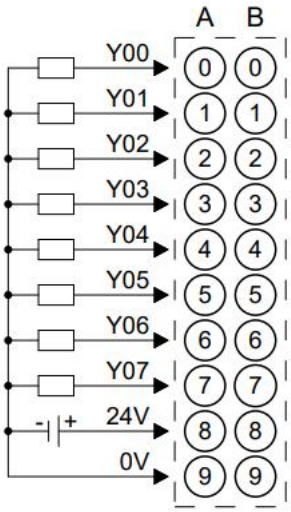

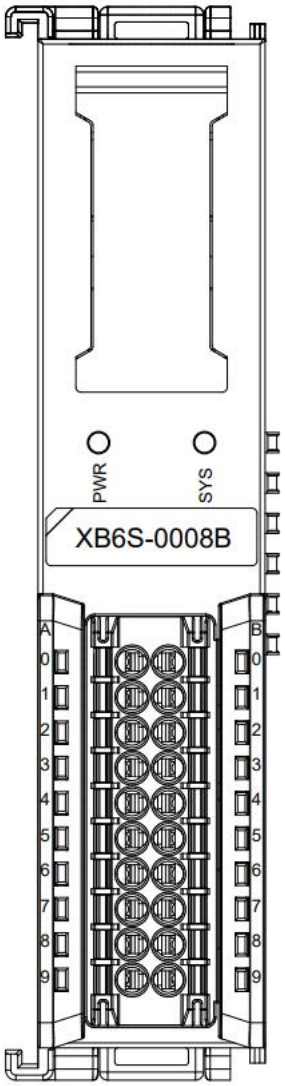

3.2.4.12 XB6S-3200N

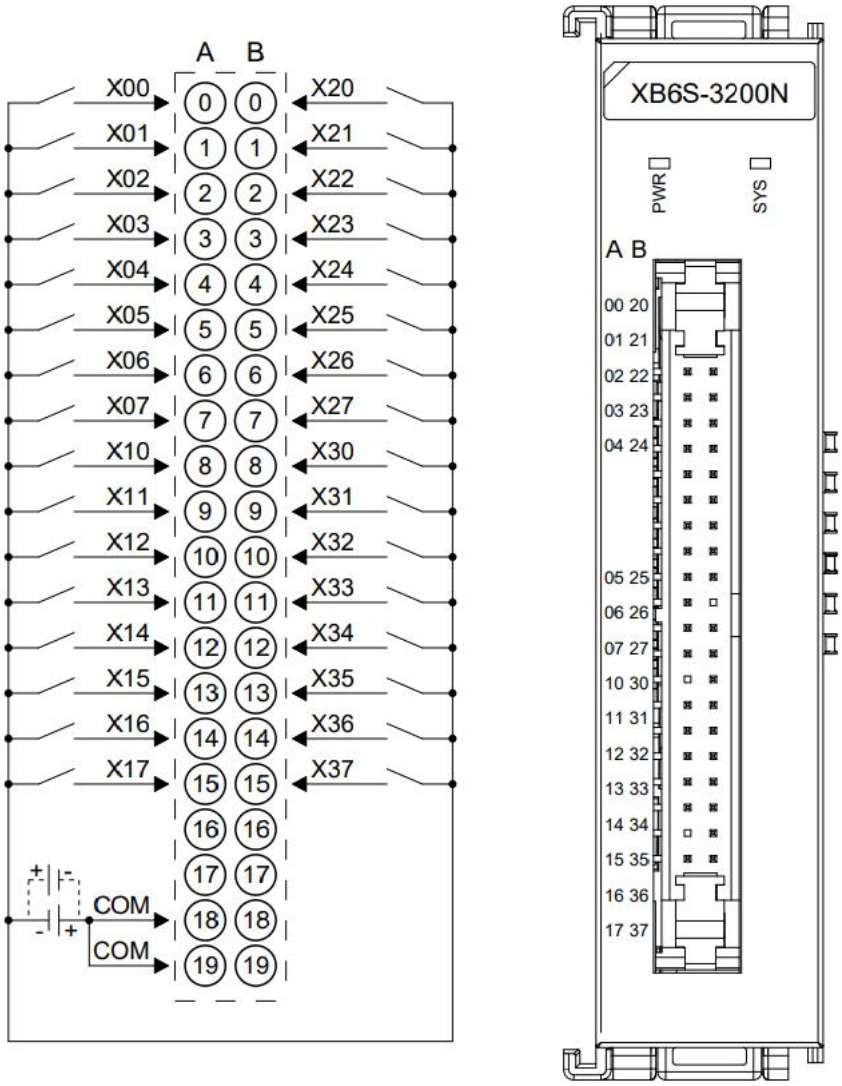

*COM internal conduction; NPN/PNP compatible

3.2.4.13 XB6S-0032AN

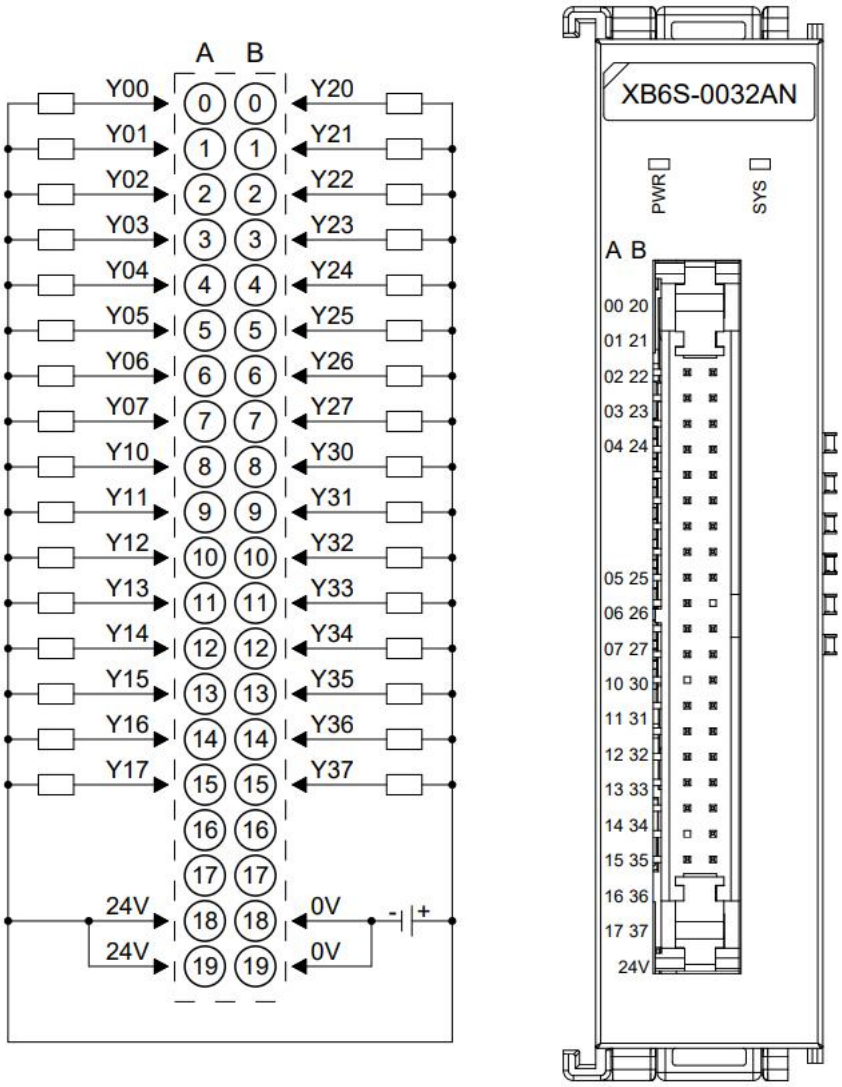

*24V internal conduction; 0V internal conduction

3.2.4.14 XB6S-0032BN

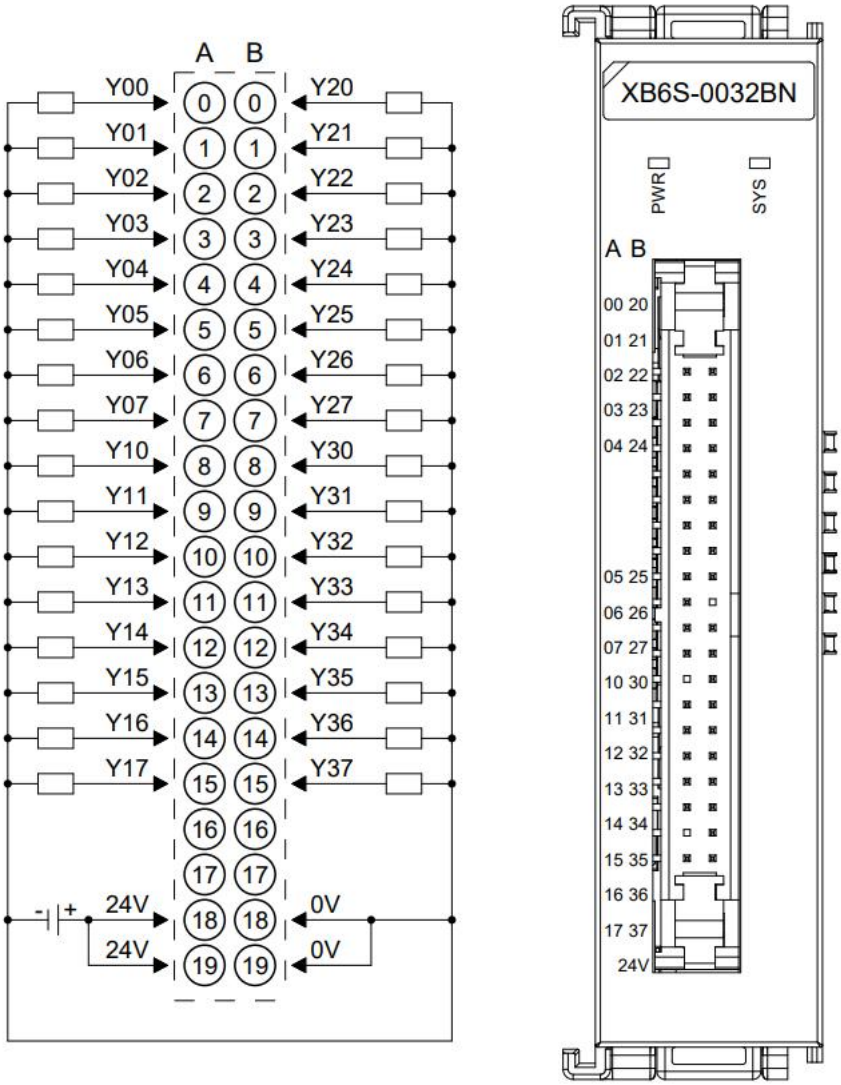

*24V internal conduction; 0V internal conduction

3.2.4.15 XB6S-0012J/6

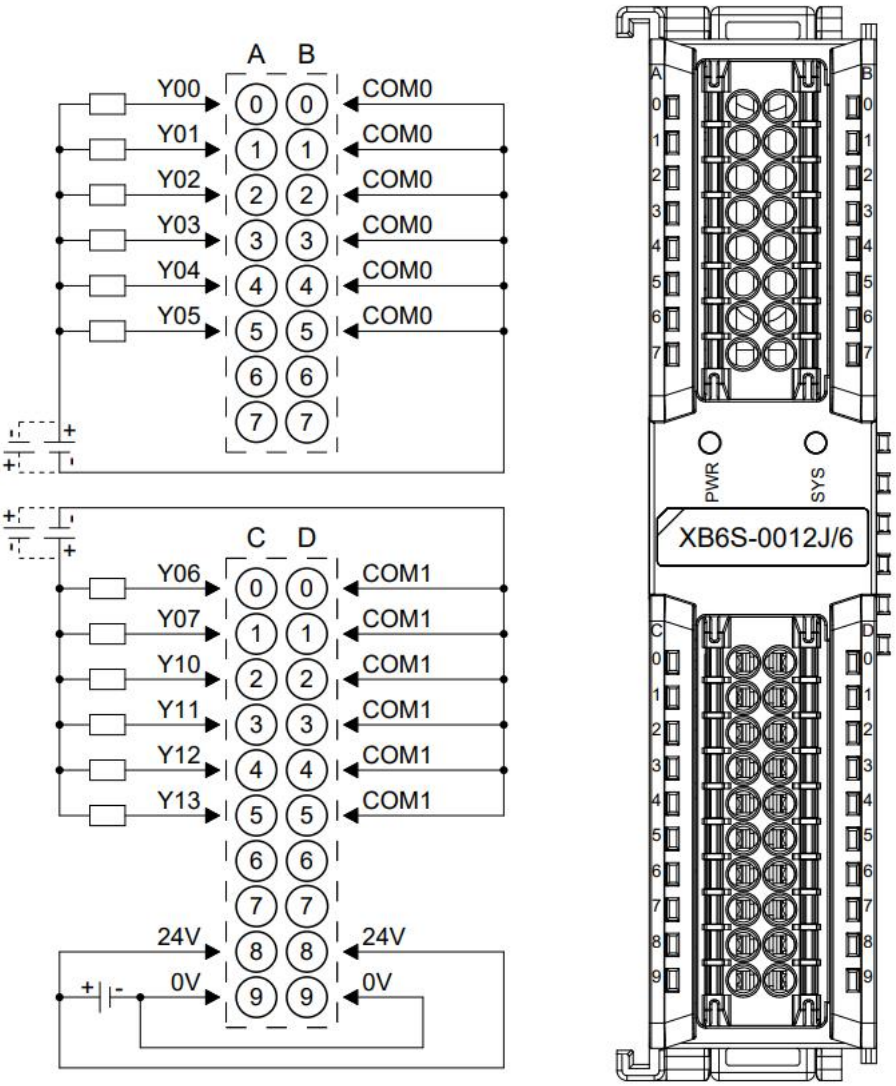

*24V internal conduction; 0V internal conduction

*COM0 is internally conductive; COM1 is internally conductive

3.2.5 Dimensions

8/16 channel digital I/O module dimensions (in mm)

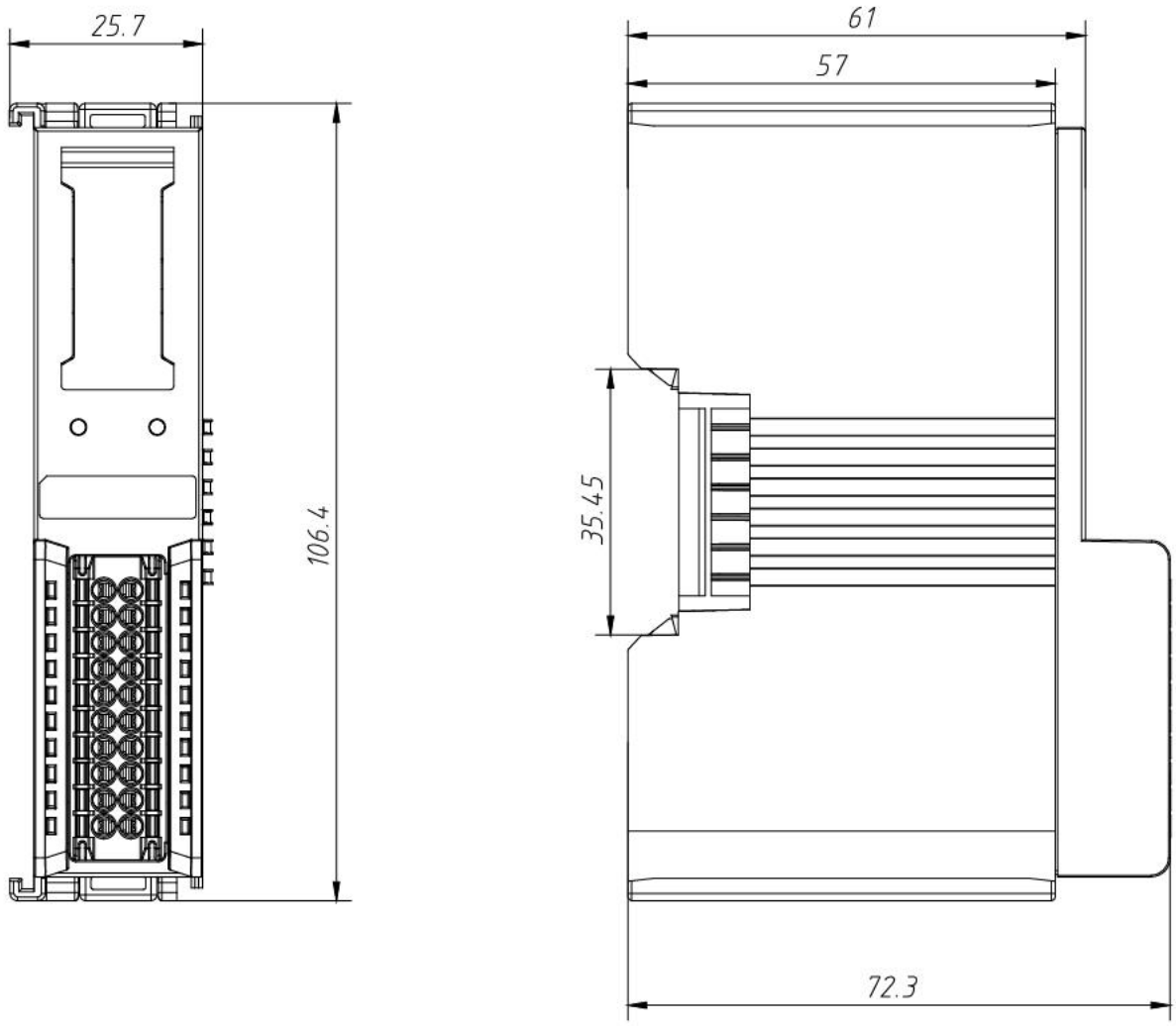

32-channel digital I/O module dimensions (in mm)

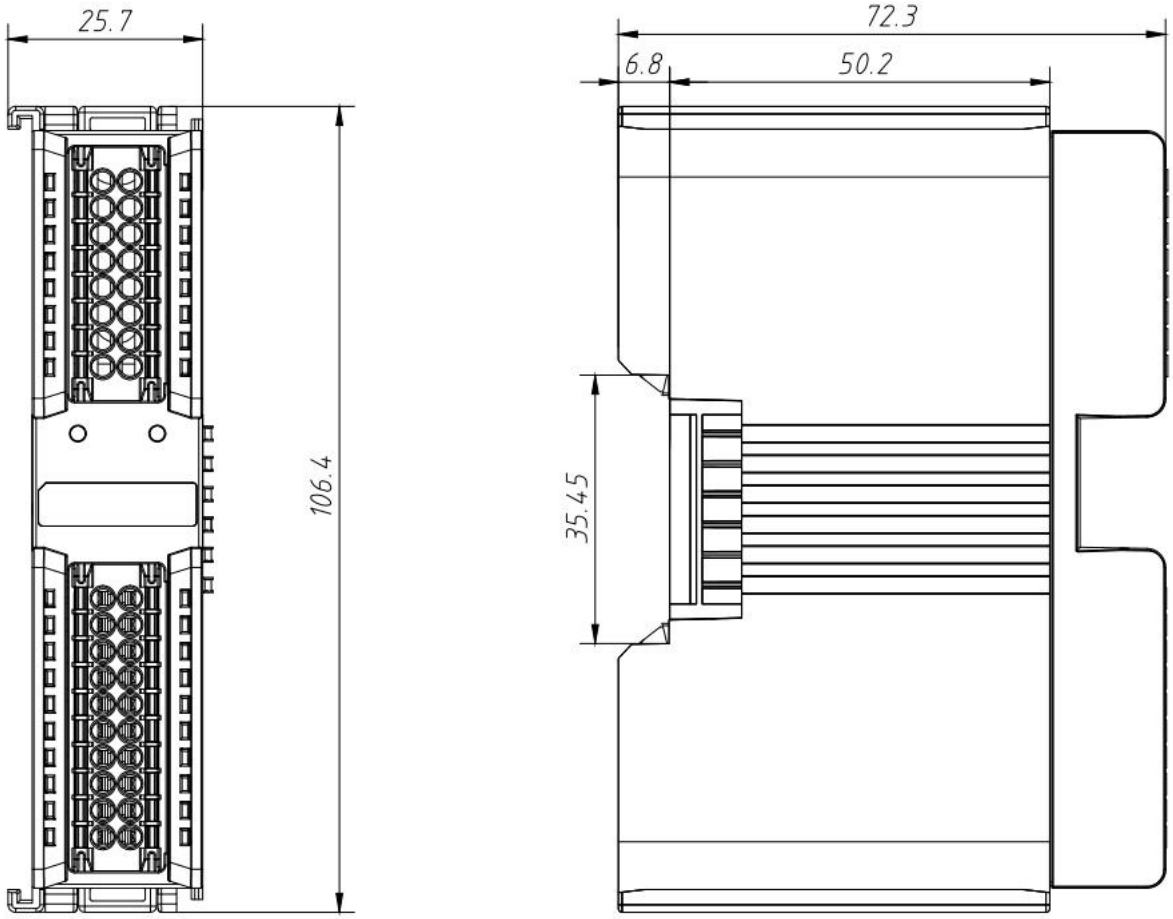

3.3 Analog I/O Modules

3.3.1 Panel structure

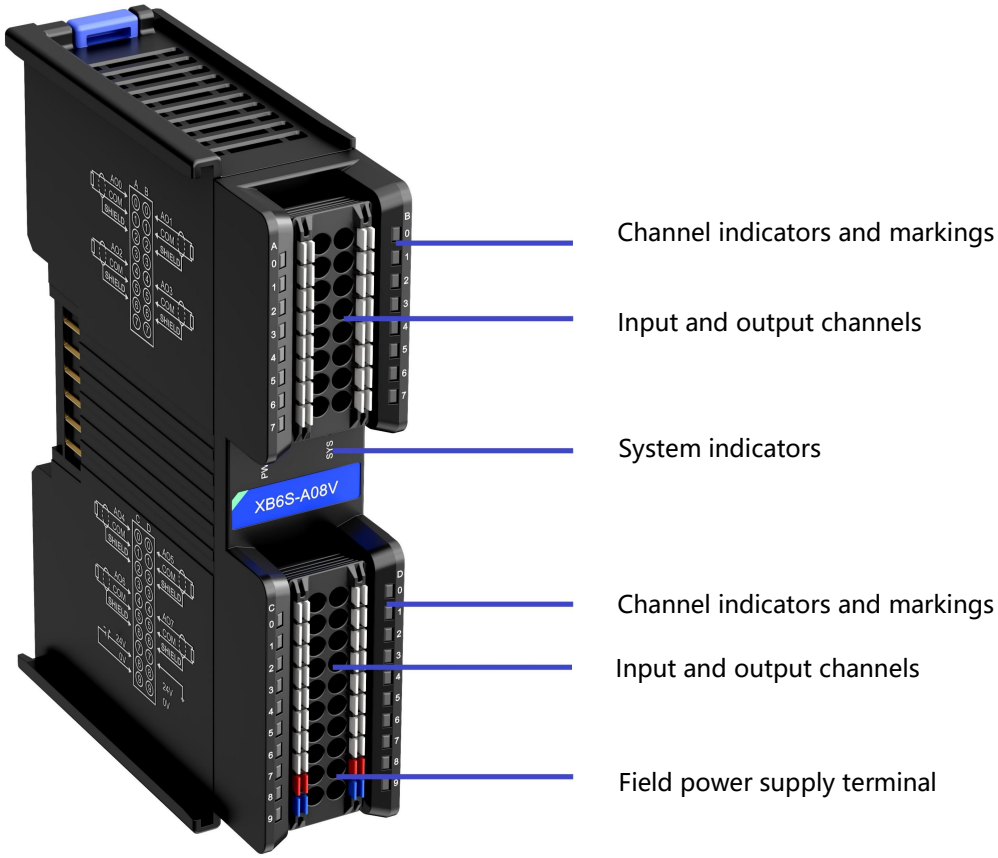

3.3.2 Indicator light function

Analog I/O module indicator light definition				
Logo	**name**	**color**	**state**	**Status description**
PWR	Power indicator	green	Always on	Power supply is normal
			Off	The product is not powered on or the power supply is abnormal
SYS	Operation status indicator	green	Always on	The system is running normally
			Flashing 1Hz	No business data interaction, waiting to establish business data interaction
			Flashing 10Hz	Firmware Upgrade
			Off	System not working
0~7	Input channel indicator	green	Always on	The module channel has signal input
			Off	The module channel has no signal input or the signal input is abnormal
0~7	Output channel	green	Always on	The module channel has signal output

	indicator		Off	The module channel has no signal output or the signal output is abnormal

3.3.3 Technical Parameters

3.3.3.1 Analog input module parameters

Analog input		
Product Model	XB6S-A80VD	XB6S-A80ID
Bus input power rated voltage	5VDC (4.5V~5.5V)	
Bus input power rated current	≤210mA	
Enter points	8	8
Input Type	Voltage Type	Current Type
Input signal	Disable、-10V~+10V、0V~10V、-5V~+5V, 0V~5V, 1V~5V (range adjustable, default is -10V~+10V)	Disable, 4mA~20mA, 0mA~20mA, -20mA~+20mA (The range is adjustable, the default is 0mA~20mA)
Input signal type	Differential signaling	
Channel response time	550us/ch 850us/8ch	
Resolution	16 bits	
Sampling rate (all channels)	≤1ksps	
Accuracy	±0.1% at 25°C, ±0.3% over the entire temperature range	
Input filtering	support	
Smoothing series	1~200	
Input impedance (voltage type)	⩾1MΩ	-
Input impedance (current type)	-	≤250Ω
Common mode voltage range	12VAC	-
Maximum voltage allowed by the channel (voltage type)	30V	-
Maximum current allowed by the channel (current type)	-	30mA
The system cannot be affected	When the ±15V power supply is damaged and short-circuited, the system +5V power supply cannot be affected	
Potential isolation	No isolation between channels, isolation between channels and backplane bus, isolation between channels and supply voltage	
Input overload protection	Support clamp protection	Support current limiting protection
Input protection	±30V	±30mA
Isolation withstand	500VDC	

voltage	
Rated current consumption	210mA
Power consumption	1.05W
Channel indicator light	Green LED light

Analog input		
Product Model	XB6S-A80V	XB6S-A80I
Bus input power rated voltage	5VDC (4.5V~5.5V)	
Bus input power rated current	≤260mA	≤110mA
Enter points	8	8
Input Type	Voltage Type	Current Type
Input signal	Disable、-10V~+10V、0V~10V、-5V~+5V, 0V~5V, 1V~5V (range adjustable, default is -10V~+10V)	Disable, 4mA~20mA, 0mA~20mA (The range is adjustable, the default is 0mA~20mA)
Input signal type	Single-ended signal	
Channel response time	560us/ch 770us/8ch	
Resolution	16 bits	
Sampling rate (all channels)	≤1ksps	
Accuracy	±0.1% at 25°C, ±0.3% over the entire temperature range	
Input filtering	support	
Smoothing series	1~200	
Input impedance (voltage type)	⩾400kΩ	-
Input impedance (current type)	-	≤100Ω
Maximum voltage allowed by the channel (voltage type)	30V	-
Maximum current allowed by the channel (current type)	-	30mA
The system cannot be affected	When the ±15V power supply is damaged and short-circuited, the system +5V power supply cannot be affected	
Potential isolation	No isolation between channels, isolation between channels and backplane bus, isolation between channels and supply voltage	
Input overload protection	Support clamp protection	Support current limiting protection
Input protection	±30V	±30mA
Isolation withstand voltage	500VDC	
Rated current consumption	260mA	110mA
Power consumption	1.35W	0.55W
Channel indicator light	Green LED light	

Analog input		
Product Model	XB6S-A40VD	XB6S-A40ID
Bus input power rated voltage	5VDC (4.5V~5.5V)	
Bus input power rated current	≤150mA	
Enter points	4	4
Input Type	Voltage Type	Current Type
Input signal	Disable、-10V~+10V、0V~10V、-5V~+5V, 0V~5V, 1V~5V (range adjustable, default is -10V~+10V)	Disable, 4mA~20mA, 0mA~20mA, -20mA~+20mA (The range is adjustable, the default is 0mA~20mA)
Input signal type	Differential signaling	
Channel response time	300us/ch 600us/4ch	
Resolution	16 bits	
Sampling rate (all channels)	≤1ksps	
Accuracy	±0.1% at 25°C, ±0.3% over the entire temperature range	
Input filtering	support	
Smoothing series	1~200	
Input impedance (voltage type)	⩾1MΩ	-
Input impedance (current type)	-	≤250Ω
Common mode voltage range	12VAC	-
Maximum voltage allowed by the channel (voltage type)	30V	-
Maximum current allowed by the channel (current type)	-	30mA
The system cannot be affected	When the ±15V power supply is damaged and short-circuited, the system +5V power supply cannot be affected	
Potential isolation	No isolation between channels, isolation between channels and backplane bus, isolation between channels and supply voltage	
Input overload protection	Support clamp protection	Support current limiting protection
Input protection	±30V	±30mA
Isolation withstand voltage	500VDC	
Rated current consumption	150mA	
Power consumption	0.75W	

Channel indicator light	Green LED light

Analog input		
Product Model	XB6S-A40V	XB6S-A40I
Bus input power rated voltage	5VDC (4.5V~5.5V)	
Bus input power rated current	≤180mA	≤100mA
Enter points	4	4
Input Type	Voltage Type	Current Type
Input signal	Disable、-10V~+10V、0V~10V、-5V~+5V, 0V~5V, 1V~5V (range adjustable, default is -10V~+10V)	Disable, 4mA~20mA, 0mA~20mA (The range is adjustable, the default is 0mA~20mA)
Input signal type	Single-ended signal	
Channel response time	400us/ch 700us/4ch	300us/ch 600us/4ch
Resolution	16 bits	
Sampling rate (all channels)	≤1ksps	
Accuracy	±0.1% at 25°C, ±0.3% over the entire temperature range	
Input filtering	support	
Smoothing series	1~200	
Input impedance (voltage type)	⩾400kΩ	-
Input impedance (current type)	-	≤100Ω
Maximum voltage allowed by the channel (voltage type)	30V	-
Maximum current allowed by the channel (current type)	-	30mA
The system cannot be affected	When the ±15V power supply is damaged and short-circuited, the system +5V power supply cannot be affected	
Potential isolation	No isolation between channels, isolation between channels and backplane bus, isolation between channels and supply voltage	
Input overload protection	Support clamp protection	Support current limiting protection
Input protection	±30V	±30mA
Isolation withstand voltage	500VDC	
Rated current consumption	180mA	100mA
Power consumption	0.95W	0.5W
Channel indicator light	Green LED light	

3.3.3.2 Analog output module parameters

Analog output		
Product Model	XB6S-A08V	XB6S-A08I
Bus input power rated voltage	5VDC (4.5V~5.5V)	
Bus input power rated current	≤100mA	
Field side input voltage range	24VDC (20.4V~28.8V)	
Output points	8	8
Output Type	Voltage Type	Current Type
Output signal	Disable、-10V~+10V、0V~10V、-5V~+5V, 0V~5V, 1V~5V (range adjustable, default is -10V~+10V)	Disable, 4mA~20mA, 0mA~20mA (The range is adjustable, the default is 0mA~20mA)
Channel response time	400us/ch 400us/8ch	
Resolution	16 bits	
Accuracy	±0.1% at 25°C, ±0.3% over the entire temperature range	
Load impedance (voltage type)	⩾2kΩ (1kΩ accuracy: ±3‰ at 25℃, ±5‰ at full temperature)	-
Load impedance (current type)	-	⩽500Ω
The system cannot be affected	When the ±15V power supply is damaged and short-circuited, the system +5V power supply cannot be affected	
Output protection	Overload protection, open circuit protection, short circuit protection (all with automatic recovery mechanism)	
Potential isolation	No isolation between channels, isolation between channels and backplane bus, isolation between channels and supply voltage	
Isolation withstand voltage	500VDC	
Rated current consumption	100mA	
Power consumption	0.5W	
Clear and keep optional functions in non-OP state	support	
Channel indicator light	Green LED light	

Analog output		
Product Model	XB6S-A04V	XB6S-A04I
Bus input power rated voltage	5VDC (4.5V~5.5V)	
Bus input power rated current	≤80mA	
Field side input voltage range	24VDC (20.4V~28.8V)	
Output points	4	4
Output Type	Voltage Type	Current Type
Output signal	Disable、-10V~+10V、0V~10V、-5V~+5V, 0V~5V, 1V~5V (range adjustable, default is -10V~+10V)	Disable, 4mA~20mA, 0mA~20mA (The range is adjustable, the default is 0mA~20mA)
Channel response time	200us/ch 200us / 4ch	
Resolution	16 bits	
Accuracy	±0.1% at 25°C, ±0.3% over the entire temperature range	
Load impedance (voltage type)	⩾2kΩ (1kΩ accuracy: ±3‰ at 25℃, ±5‰ at full temperature)	-
Load impedance (current type)	-	⩽500Ω
The system cannot be affected	When the ±15V power supply is damaged and short-circuited, the system +5V power supply cannot be affected	
Output protection	Overload protection, open circuit protection, short circuit protection (all with automatic recovery mechanism)	
Potential isolation	No isolation between channels, isolation between channels and backplane bus, isolation between channels and supply voltage	
Isolation withstand voltage	500VDC	
Rated current consumption	80mA	
Power consumption	0.4W	
Clear and keep optional functions in non-OP state	support	
Channel indicator light	Green LED light	

3.3.3.3 Analog current&voltage compatible input module parameters

Analog current&voltage compatible input		
Product Model	XB6S-A80	XB6S-A40
Bus input power rated voltage	5VDC (4.5V~5.5V)	
Bus input power rated current	≤100mA	≤80mA

Enter points	8	4
Input Type	current&voltage compatible	
Input signal	Disable、0mA~20mA、4mA~20mA、-20mA~+20mA、-10V~+10V、0V~10V、-5V~+5V、0V~5V、1V~5V（The range is adjustable, the default is 4mA~20mA）	
Input signal type	single-ended signal	
Channel response time	1ms / ch	
Resolution	16bits	
Sampling rate (all channels)	≤1ksps	
Accuracy	25℃时±0.1%，±0.3% over the entire temperature range	
Input filtering	Support	
Smoothing series	1~200	
Input impedance (voltage type)	⩾100kΩ	
Input impedance (current type)	≤100Ω	
Maximum voltage allowed by the channel (voltage type)	30V	
Maximum current allowed by the channel (current type)	30mA	
The system cannot be affected	When the ±15V power supply is damaged and short-circuited, the system +5V power supply cannot be affected	
Potential isolation	No isolation between channels, isolation between channels and backplane bus, isolation between channels and supply voltage	
Input overload protection	Support Clamp protection（voltage）/Support current-limiting protection（current）	
Input protection	±30V（voltage）/±30mA（current）	
Isolation withstand voltage	500VDC	
Rated current consumption	100mA	80mA
Power consumption	0.5W	0.4W
Channel indicator light	Green LED light	
current/voltage Input disconnection detection	Support	

3.3.3.4 Analog current&voltage compatible output module parameters

Analog current&voltage compatible output		
Product Model	XB6S-A08	XB6S-A04
Bus input power rated	5VDC（4.5V~5.5V）	

voltage		
Bus input power rated current	≤100mA	≤80mA
Field side input voltage range	24VDC（20.4V~28.8V）	
Output points	8	4
Output Type	current&voltage compatible	
Output signal	Disable、0mA~20mA、4mA~20mA、-10V~+10V、0V~10V、-5V~+5V、0V~5V、1V~5V（The range is adjustable, the default is 4mA~20mA）	
Channel response time	400us / ch	
Resolution	16bits	
Accuracy	25℃时±0.1%，±0.3% over the entire temperature range	
Load impedance (voltage type)	⩾2kΩ (accuracy: ±1‰ at 25℃, ±3‰ at full temperature)	
Load impedance (current type)	⩽600Ω	
The system cannot be affected	When the ±15V power supply is damaged and short-circuited, the system +5V power supply cannot be affected	
Output protection	Overload protection, open circuit protection, short circuit protection (all with automatic recovery mechanism)	
Potential isolation	No isolation between channels, isolation between channels and backplane bus, isolation between channels and supply voltage	
Isolation withstand voltage	500VDC	
Rated current consumption	100mA	80mA
Power consumption	0.5W	0.4W
Clear and keep optional functions in non-OP state	Support	
Channel indicator light	Green LED light	
Side power detection	Support	

3.3.3.5 General technical parameters

General technical parameters	
Specifications and dimensions	106.4 × 25.7 × 72.3mm
weight	8-channel AIO: 125g
	4-channel AIO: 105g
Operating temperature	-20℃~+60℃
Storage temperature	-40℃~+80℃
Relative humidity	95%, non-condensing
Altitude	≤2000m
Pollution degree	Level 2

Protection level	IP20
Safety Certification	UL certification, CE certification
Green certification	RoHS certification, REACH certification

3.3.4 Analog voltage parameters

3.3.4.1 Voltage input range selection table

Voltage input range selection and code value range					
Range selection	Range	Code value range	Voltage input calculation formula	Voltage output calculation formula	Code value correspondence table
0	Disable: indicates that the channel is disabled.				
1 (default)	-10V~+10V	-32768~32767	D=(65535/20)*U	U=(D*20)/65535	See also3.3.4.3 Voltage Input Code Value Table
2	0V~10V	0~32767	D=(32767/10)*U	U=(D*10)/32767	
3	-10V~+10V	-27648~27648	D=(55296/20)*U	U=(D*20)/55296	
4	0V~10V	0~27648	D=(27648/10)*U	U=(D*10)/27648	
5	-5V~+5V	-27648~27648	D=(55296/10)*U	U=(D*10)/55296	
6	0V~5V	0~27648	D=(27648/5)*U	U=(D*5)/27648	
7	1V~5V	0~27648	D=(27648/4)*U-6912	U=(D+6912)*4/27648	

Note: D represents the code value, U represents the voltage, and the analog voltage input module range defaults to 1: -10V~+10V (-32768~32767).

3.3.4.2 Voltage output range selection table

Voltage output range selection and code value range					
Range selection	Range	Code value range	Voltage input calculation formula	Voltage output calculation formula	Code value correspondence table
0	Disable: indicates that the channel is disabled.				
1 (default)	-10V~+10V	-32768~32767	D=(65535/20)*U	U=(D*20)/65535	See also3.3.4.4 Voltage output code value table
2	0V~10V	0~32767	D=(32767/10)*U	U=(D*10)/32767	
3	-10V~+10V	-27648~27648	D=(55296/20)*U	U=(D*20)/55296	
4	0V~10V	0~27648	D=(27648/10)*U	U=(D*10)/27648	
5	-5V~+5V	-27648~27648	D=(55296/10)*U	U=(D*10)/55296	
6	0V~5V	0~27648	D=(27648/5)*U	U=(D*5)/27648	
7	1V~5V	0~27648	D=(27648/4)*U-6912	U=(D+6912)*4/27648	

Note: D represents the code value, U represents the voltage, and the analog voltage output module range defaults to 1: -10V~+10V (-32768~32767).

3.3.4.3 Voltage Input Code Value Table

Range / Voltage	-10V~+10V	0V~10V	-10V~+10V	0V~10V
	-32768~32767	0~32767	-27648~27648	0~27648
	Code value	Code value	Code value	Code value
-10.13	-	-	-27980	-
-10	-32768	-	-27648	-
-9	-29491	-	-24883	-
-8	-26214	-	-22118	-
-7	-22937	-	-19354	-
-6	-19661	-	-16589	-
-5	-16384	-	-13824	-
-4	-13107	-	-11059	-
-3	-9830	-	-8294	-
-2	-6554	-	-5530	-
-1	-3277	-	-2765	-
-0.13	-426	-384	-359	-332
-0.06	-197	-197	-166	-156
0	0	0	0	0
1	3277	3277	2765	2765
2	6554	6554	5530	5530
3	9830	9830	8294	8294
4	13107	13107	11059	11059
5	16384	16384	13824	13824
6	19661	19661	16589	16589
7	22937	22937	19354	19354
8	26214	26214	22118	22118
9	29491	29491	24883	24883
10	32767	32767	27648	27648
10.12	-	-	27980	27980
Code value formula	Code value =(65535/20)*Voltage	Code value =(32767/10)*Voltage	Code value =(55296/20)*Voltage	Code value =(27648/10)*Voltage
Voltage formula	Voltage =(Code value*20) /65535	Voltage =(Code value*10) /32767	Voltage =(Code value*20) /55296	Voltage =(Code value*10) /27648

Note: ① When the voltage input module range is selected as -10V~+10V (-32768~32767), it supports the overflow function, that is, when the channel input voltage is greater than 10V, the maximum code value 32767 is displayed; when the input channel input voltage is less than -10V, the minimum code value is displayed.-32768.

②When the voltage input module range is selected as 0V~10V (0~32767), it supports underflow, overshoot, overflow and underflow alarm functions. Overshoot means that the channel input range exceeds the range and enters overshoot, and the normal calculation code value is displayed within

-0.13V~+10V. When the channel input voltage is greater than 10V, the maximum code value 32767 is displayed; when the input channel input voltage is less than -0.13V, the minimum overshoot code value is displayed.-384,Simultaneous alarm.

③Voltage input module range selection -10V~+10V(-27648~27648) supports overshoot, overflow, underflow and underflow alarm functions. Overshoot means that the channel input range exceeds the range and enters overshoot, and the normal calculation code value is displayed within -10.13V~+10.12V. Underflow means that when the channel input voltage is greater than 10.12V, the maximum overshoot code value 27980 is displayed, and an alarm is issued at the same time; when the input channel input voltage is less than -10.13V, the minimum overshoot code value is displayed-27980, alarm at the same time.

④Voltage input module range selection 0V~10V (0~27648) supports overshoot, overflow, and overflow alarm functions. Overshoot means that the channel input range exceeds the range and enters overshoot, and the normal calculation code value is displayed within -0.13V~+10.12V. Overflow means that when the channel input voltage is greater than 10.12V, the maximum overshoot code value 27980 is displayed, and an alarm is issued at the same time; when the input channel input voltage is less than -0.13V, the minimum overshoot code value is displayed-332, alarm at the same time.

Range / Voltage	**-5V~+5V**	**0V~5V**	**1V~5V**
	-27648~27648	**0~27648**	**0~27648**
	Code value	**Code value**	**Code value**
-5.07	-27980	-	-
-5	-27648	-	-
-4	-22118	-	-
-3	-16588	-	-
-2	-11060	-	-
-1	-5530	-	-
-0.07	-332	-332	-
0	0	0	-
0.94	5198	5198	-345
1	5530	5530	0
2	11060	11060	6912
3	16588	16588	13824
4	22118	22118	20736
5	27648	27648	27648
5.06	27980	27980	27933
Code value formula	Code value=(55296/10)*Voltage	Code value=(27648/5)*Voltage	Code value=(27648/4)*Voltage-6912
Voltage formula	Voltage=(Code value*10)/55296	Voltage=(Code value*5)/27648	Voltage=(Code value+6912)*4/27648

Note:①When the voltage input module range is -5V~+5V (-27648~27648), it supports overshoot, overflow, and overflow alarm functions. Overshoot means that the channel input range exceeds the range and enters overshoot, and the normal calculation code value is displayed within -5.07V~+5.06V.

When the channel input voltage is greater than 5.06V, the maximum overshoot code value 27980 is displayed, and an alarm is issued at the same time; when the input channel input voltage is less than -5.07V, the minimum overshoot code value -27980 is displayed, and an alarm is issued at the same time.

② The voltage input module range is 0V~5V (0~27648) supports overshoot, overflow, and overflow alarm functions. Overshoot means that the channel input range exceeds the range and enters overshoot, and the normal calculation code value is displayed within -0.07V~+5.06V. Overflow means that when the channel input voltage is greater than 5.06V, the maximum overshoot code value 27980 is displayed, and an alarm is issued at the same time; when the input channel input voltage is less than -0.07V, the minimum overshoot code value is displayed-332, alarm at the same time.

③The voltage input module range is 1V~5V (0~27648) supports overshoot, overflow, underflow and underflow alarm functions. Overshoot means that the channel input range exceeds the range and enters overshoot, and the normal calculation code value is displayed within 0.94V~5.06V. Underflow means that when the channel input voltage is greater than 5.06V, the maximum overshoot code value 27933 is displayed, and an alarm is issued at the same time; when the input channel input voltage is less than 0.94V, the minimum overshoot code value is displayed-345, alarm at the same time.

3.3.4.4 Voltage output code value table

Range / Voltage	-10V~+10V	0V~10V	-10V~+10V	0V~10V
	-32768~32767	0~32767	-27648~27648	0~27648
	Code value	Code value	Code value	Code value
-10	-32768	-	-27648	-
-9	-29491	-	-24883	-
-8	-26214	-	-22118	-
-7	-22937	-	-19354	-
-6	-19661	-	-16589	-
-5	-16384	-	-13824	-
-4	-13107	-	-11059	-
-3	-9830	-	-8294	-
-2	-6554	-	-5530	-
-1	-3277	-	-2765	-
0	0	0	0	0
1	3277	3277	2765	2765
2	6554	6554	5530	5530
3	9830	9830	8294	8294
4	13107	13107	11059	11059
5	16384	16384	13824	13824
6	19661	19661	16589	16589
7	22937	22937	19354	19354
8	26214	26214	22118	22118
9	29491	29491	24883	24883
10	32767	32767	27648	27648
Code value formula	Code value =(65535/20)*Voltage	Code value =(32767/10)*Voltage	Code value =(55296/20)*Voltage	Code value =(27648/10)*Voltage
Voltage formula	Voltage =(Code value*20) /65535	Voltage =(Code value*10) /32767	Voltage =(Code value*20) /55296	Voltage =(Code value*10) /27648

Note: ①The voltage output module supports overflow and underflow functions.When the voltage output module range is selected as -10V~+10V or 0V~10V and the code value is set greater than the maximum code value corresponding to the range, all channels output 10V voltage;

When the voltage output module range is -10V~+10V and the code value is set to be less than the minimum code value corresponding to the range, all channels output -10V voltage;

When the voltage output module range is selected as 0V~10V and the code value is set to be less than the minimum code value corresponding to the range, all channels output 0V voltage.

Range / Voltage	-5V~+5V	0V~5V	1V~5V
	-27648~27648	0~27648	0~27648
	Code value	Code value	Code value
-5	-27648	-	-
-4	-22118	-	-
-3	-16588	-	-
-2	-11060	-	-
-1	-5530	-	-
0	0	0	-
1	5530	5530	0
2	11060	11060	6912
3	16588	16588	13824
4	22118	22118	20736
5	27648	27648	27648
Code value formula	Code value=(55296/10)*Voltage	Code value=(27648/5)*Voltage	Code value=(27648/4)*Voltage-6912
Voltage formula	Voltage=(Code value*10)/55296	Voltage=(Code value*5)/27648	Voltage=(Code value+6912)*4/27648

Note:①The voltage output module supports overflow and underflow functions.When the voltage output module range is -5V~+5V/0V~5V/1V~5V and the code value is set greater than the maximum code value corresponding to the range, all channels output 5V voltage;

When the voltage output module range is -5V~+5V and the code value is set to be less than the minimum code value corresponding to the range, all channels output -5V voltage;

When the voltage output module range is selected as 0V~5V and the code value is set to be less than the minimum code value corresponding to the range, all channels output 0V voltage;

When the voltage output module range is selected as 1V~5V and the code value is set to be less than the minimum code value corresponding to the range, all channels output 1V voltage.

3.3.5 Analog current parameters

3.3.5.1 Current input range selection table

Current input range selection and code value range					
Range selection	Range	Code value range	Current input calculation formula	Current output calculation formula	Code value correspondence table
0	Disable: indicates that the channel is disabled.				
1	4mA~20mA	0~65535	D=(65535/16)*I-16384	I=(D+16384)*16/65535	See also3.3.5.3 Current input code value table
2 (default)	0mA~20mA	0~65535	D=(65535/20)*I	I=(D*20)/65535	
3	4mA~20mA	0~27648	D=(27648/16)*I-6912	I=((D+6912)*16)/27648	
4	0mA~20mA	0~27648	D=(27648/20)*I	I=(D*20)/27648	
5	-20mA~+20mA	0~65535	D=(65535/40)*(I+20)	I=(D*40)/65535-20	

Note: D represents the code value, I represents the current, and the default range of the analog current input module is 2: 0mA~20mA (0~65535).

Range 5: -20mA~+20mA (0~65535) is unique to the current input differential signal module.

3.3.5.2 Current output range selection table

Current output range selection and code value range					
Range selection	Range	Code value range	Current input calculation formula	Current output calculation formula	Code value correspondence table
0	Disable: indicates that the channel is disabled.				
1	4mA~20mA	0~65535	D=(65535/16*I)-16384	I=(D+16384)*16/65535	See also3.3.5.4 Current output code value table
2 (default)	0mA~20mA	0~65535	D=(65535/20)*I	I=(D*20)/65535	
3	4mA~20mA	0~27648	D=(27648/16)*I-6912	I=((D+6912)*16)/27648	
4	0mA~20mA	0~27648	D=(27648/20)*I	I=(D*20)/27648	

Note: D represents the code value, I represents the current, and the analog current output module range is 2 by default: 0mA~20mA (0~65535).

3.3.5.3 Current input code value table

Range / Current	4mA~20mA	0mA~20mA	4mA~20mA	0mA~20mA	-20mA~+20mA
	0~65535	0~65535	0~27648	0~27648	0~65535
	Code value	Code value	Code value	Code value	Code value
-20	-	-	-	-	0
-15	-	-	-	-	8192
-10	-	-	-	-	16384
-9	-	-	-	-	18022
-8	-	-	-	-	19661
-7	-	-	-	-	21299
-6	-	-	-	-	22937
-5	-	-	-	-	24576
-4	-	-	-	-	26214
-3	-	-	-	-	27852
-2	-	-	-	-	29491
-1	-	-	-	-	31129
0	-	0	-	0	32768
1	-	3277	-	1382	34406
2	-	6554	-	2765	36044
3	-	9830	-	4147	37683
4	0	13107	0	5530	39321
5	4096	16384	1728	6912	40959
6	8192	19661	3456	8294	42598
7	12288	22937	5184	9677	44236
8	16384	26214	6912	11059	45875
9	20479	29491	8640	12442	47513
10	24575	32768	10368	13824	49151
11	28671	36044	12096	15206	50790
12	32767	39321	13824	16589	52428
13	36863	42598	15552	17971	54066
14	40959	45875	17280	19354	55705
15	45055	49151	19008	20736	57343
16	49151	52428	20736	22118	58982
17	53247	55705	22464	23501	60620
18	57343	58982	24192	24883	62258
19	61439	62258	25920	26266	63897
20	65535	65535	27648	27648	65535
20.19	-	-	28034	27917	-
20.24	-	-	28085	27986	-
Code value formula	Code value = 65535/16*current-16384	Code value = (65535/20) * current	Code value = (27648/16)*current-6912	Code value = (27648/20) * current	Code value =(65535/40)*(current+20)

Note: Range 5: -20mA~+20mA (0~65535) is unique to the current input differential signal module.

① When the current input module range is selected as 4mA~20mA (0~65535), it supports overflow and overflow alarm functions, that is, when the channel input current is greater than 20.03mA, the maximum code value 65535 is displayed and an alarm is issued; when the input channel input current is less than 4mA, the minimum code value is displayed0.

②When the current input module range is selected from 0mA to 20mA (0 to 65535), it supports overflow, underflow and overflow alarm functions. That is, when the channel input current is greater than 20.03mA, the maximum code value 65535 is displayed and an alarm is issued at the same time.; When the input channel input current is less than 0mA, the minimum code value 0 is displayed.

③When the current input module range is 4mA~20mA (0~27648), it supports overflow, overshoot, overflow, and overflow alarm functions. Overshoot means that the channel input range exceeds the range and enters overshoot, and the normal calculation code value is displayed within 4mA~20.24mA. Overflow means that when the channel input current is greater than 20.24mA, the maximum overshoot code value is displayed.28085When the input current of the input channel is less than 4mA, the minimum overshoot code value 0 is displayed.

④When the current input module range is 0mA~20mA (0~27648), it supports overflow, overshoot, overflow, and overflow alarm functions. Overshoot means that the channel input range exceeds the range and enters overshoot, and the normal calculation code value is displayed within 0mA~20.24mA. Overflow means that when the channel input current is greater than 20.24mA, the maximum overshoot code value is displayed.27986When the input current of the input channel is less than 0mA, the minimum overshoot code value 0 is displayed.

⑤When the current input module range is -20mA~+20mA (0~65535), it supports overflow, underflow and overflow alarm functions. That is, when the channel input current is greater than 20mA, the maximum code value 65535 is displayed and an alarm is given at the same time.; Input channel input is less than-20mAWhen the current is on, the minimum code value 0 is displayed.

3.3.5.4 Current output code value table

Range / Current	4mA~20mA	0mA~20mA	4mA~20mA	0mA~20mA
	0~65535	0~65535	0~27648	0~27648
	Code value	Code value	Code value	Code value
0	-	0	-	0
1	-	3277	-	1382
2	-	6554	-	2765
3	-	9830	-	4147
4	0	13107	0	5530
5	4096	16384	1728	6912
6	8192	19661	3456	8294
7	12288	22937	5184	9677
8	16384	26214	6912	11059
9	20479	29491	8640	12442
10	24575	32768	10368	13824
11	28671	36044	12096	15206
12	32767	39321	13824	16589
13	36863	42598	15552	17971
14	40959	45875	17280	19354
15	45055	49151	19008	20736
16	49151	52428	20736	22118
17	53247	55705	22464	23501
18	57343	58982	24192	24883
19	61439	62258	25920	26266
20	65535	65535	27648	27648
22.81	-	-	32511	31538
23.52	-	-	-	32511
Code value formula	Code value = 65535/16*current-16384	Code value = (65535/20) * current	Code value = (27648/16)*current-6912	Code value = (27648/20) * current

Note: ① When the current output module range is 4mA~20mA (0~27648) and 0mA~20mA (0~27648), it supports overflow overshoot, overflow and overflow alarm functions. That is, when the current output module range is 4mA~20mA (0~27648) and the code value is set greater than32511When the current output module is set to 0mA~20mA (0~27648), the code value is set to be greater than32511When , all channels output 23.52mA current and alarm at the same time.

3.3.6 Wiring Diagram

3.3.6.1 XB6S-A80VD

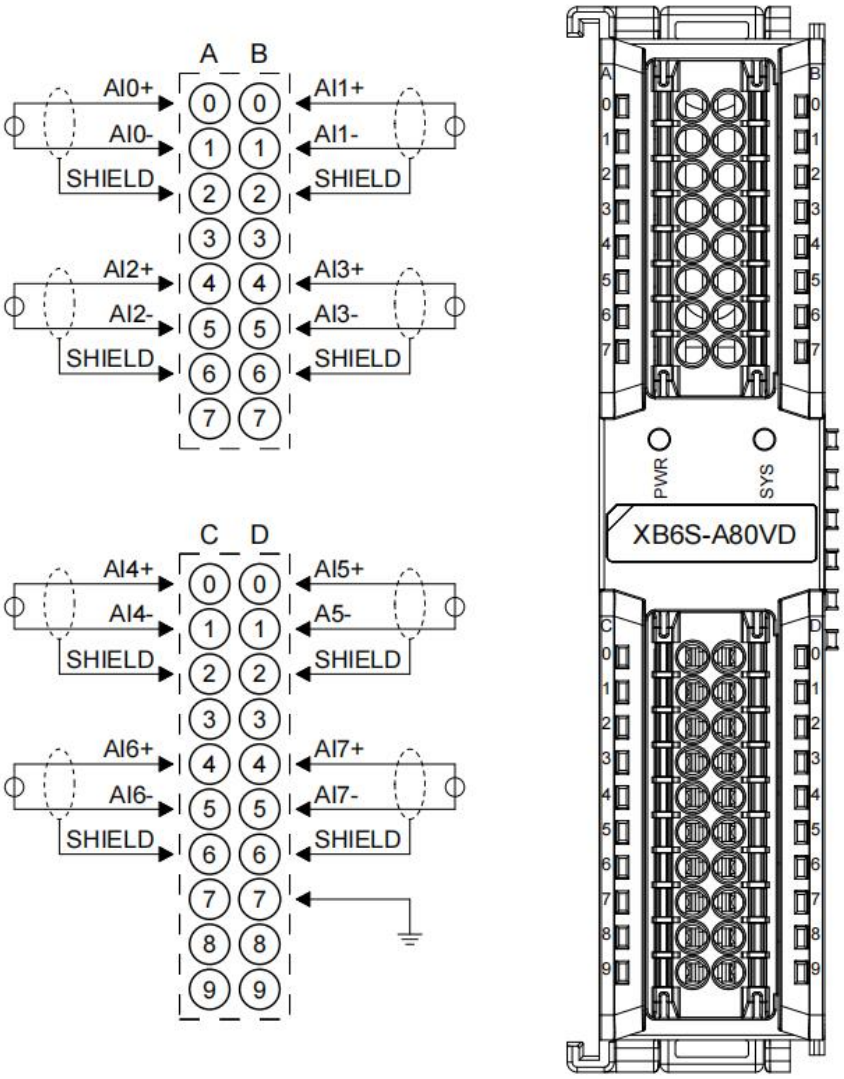

*All SHIELD internal conduction

*It is recommended to use shielded twisted pair cables, connect the shield layer to the SHIELD port, and ground it reliably

3.3.6.2 XB6S-A80V

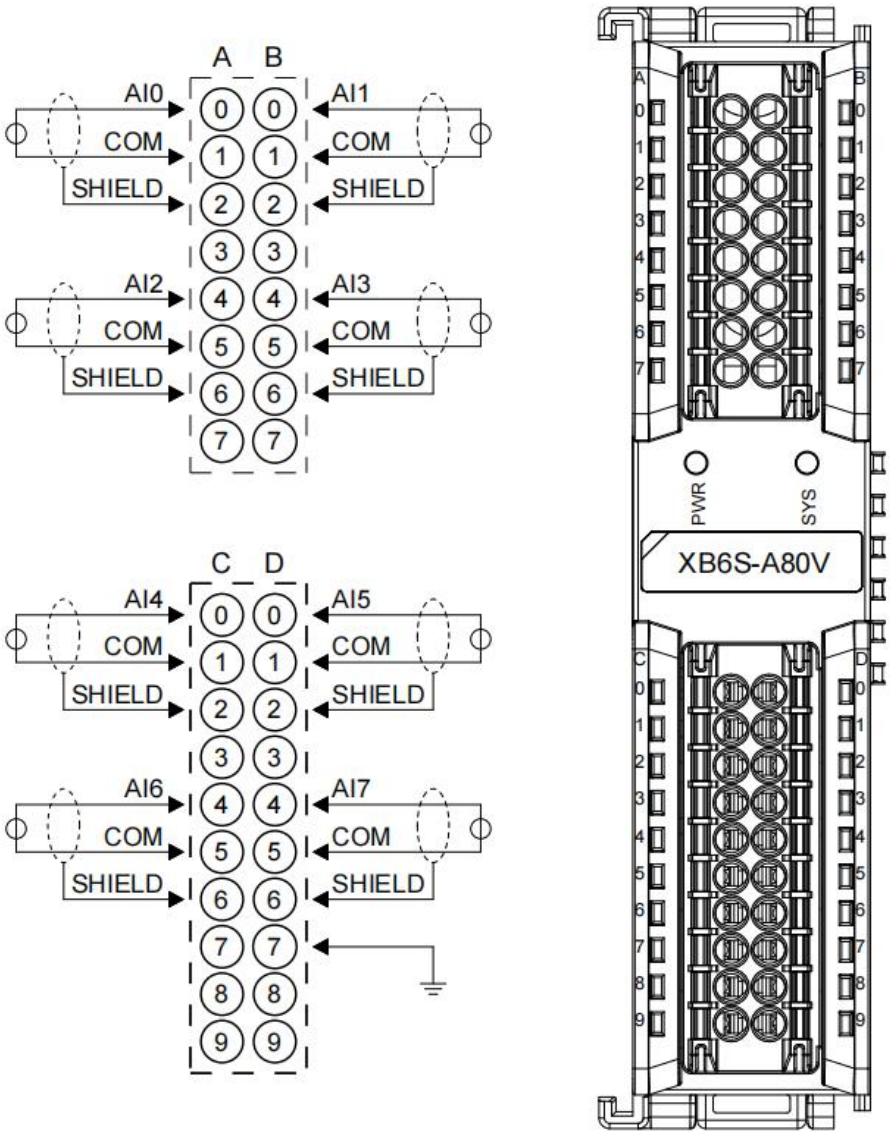

*COM is internally conductive, SHIELD is internally conductive

*All channel loads must be from the same source

* Shielded twisted pair cables are recommended for signal cables

3.3.6.3 XB6S-A40VD

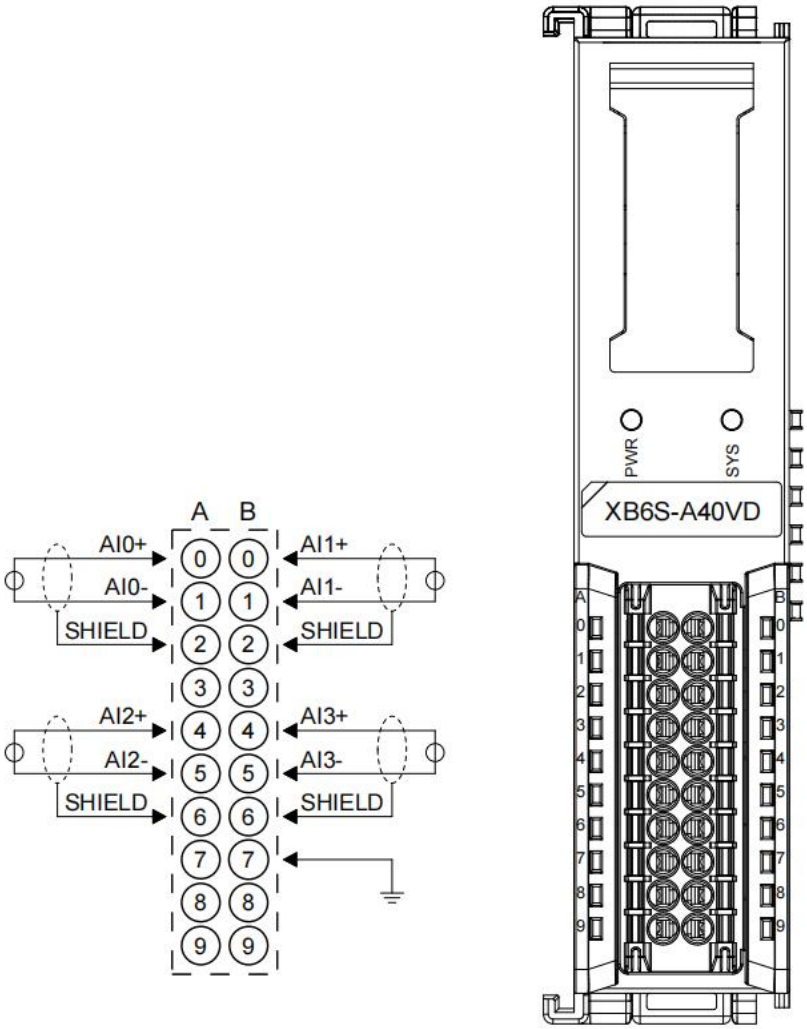

*All SHIELD internal conduction

*It is recommended to use shielded twisted pair cables, connect the shield layer to the SHIELD port, and ground it reliably

3.3.6.4 XB6S-A40V

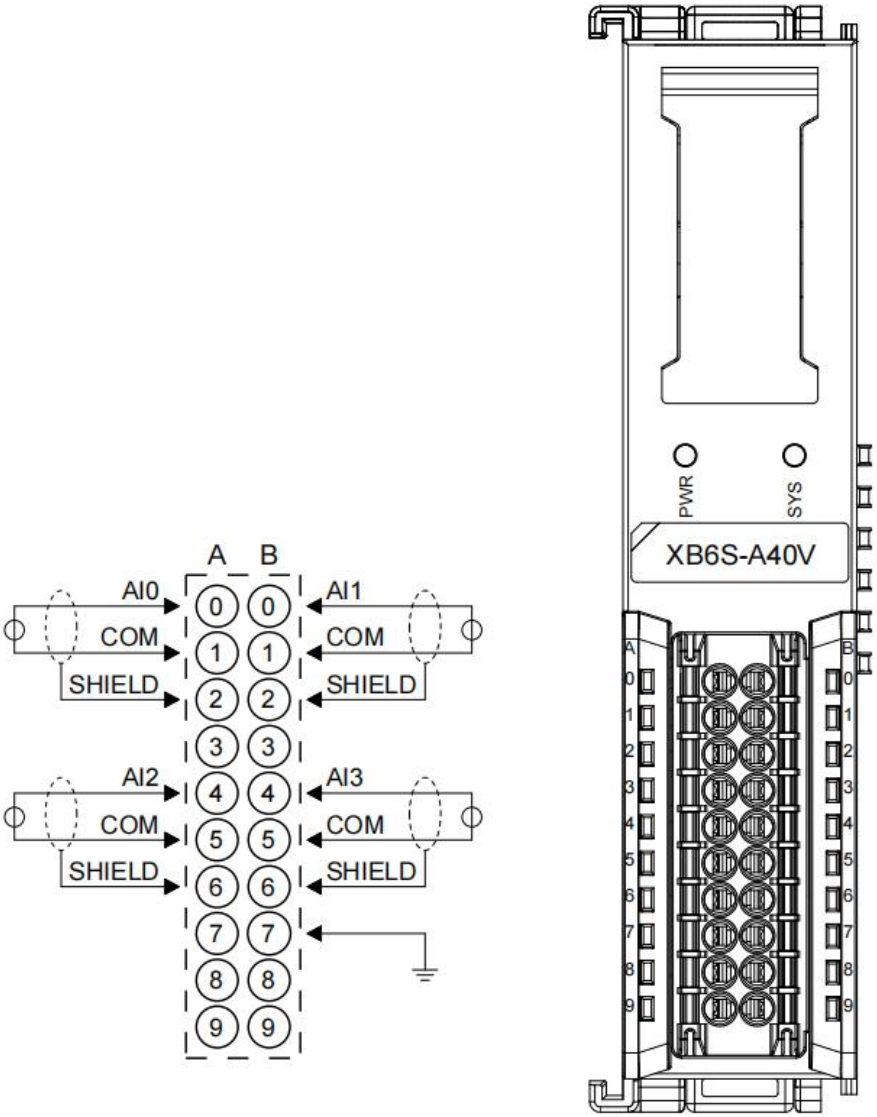

*COM is internally conductive, SHIELD is internally conductive

*All channel loads must be from the same source

* Shielded twisted pair cables are recommended for signal cables

3.3.6.5 XB6S-A80ID

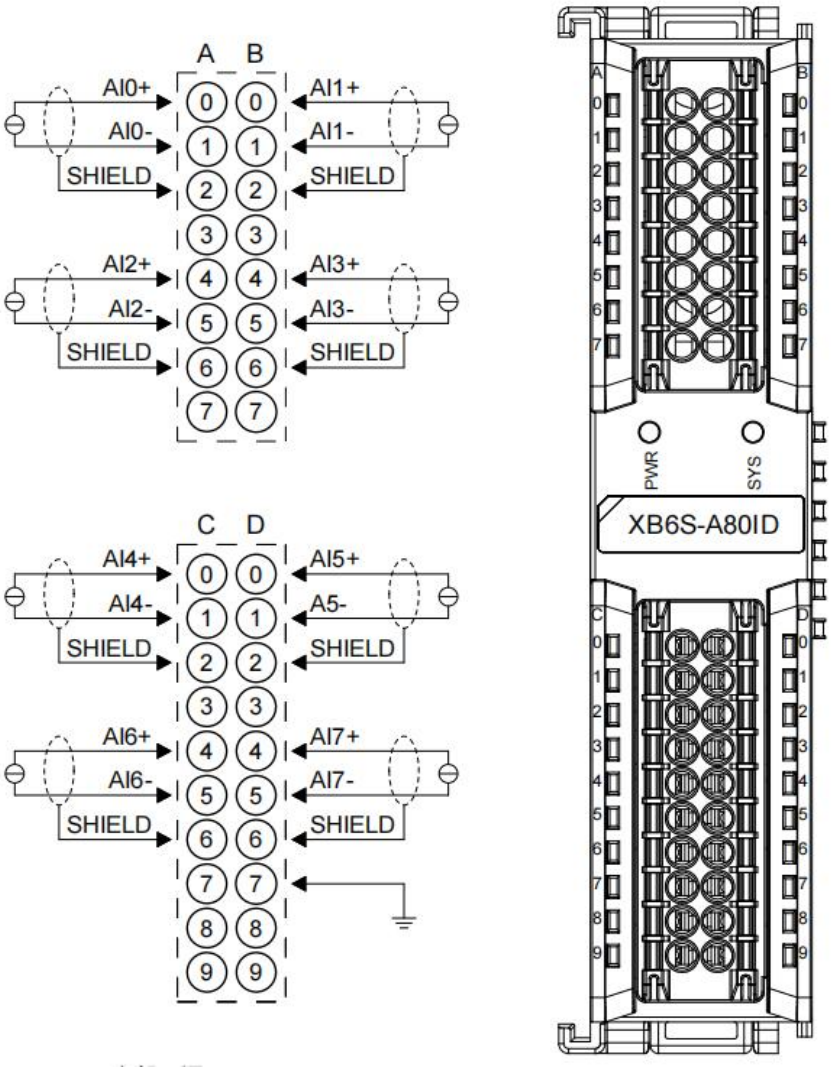

*All SHIELD internal conduction

*It is recommended to use shielded twisted pair cables, connect the shield layer to the SHIELD port, and ground it reliably

3.3.6.6 XB6S-A80I

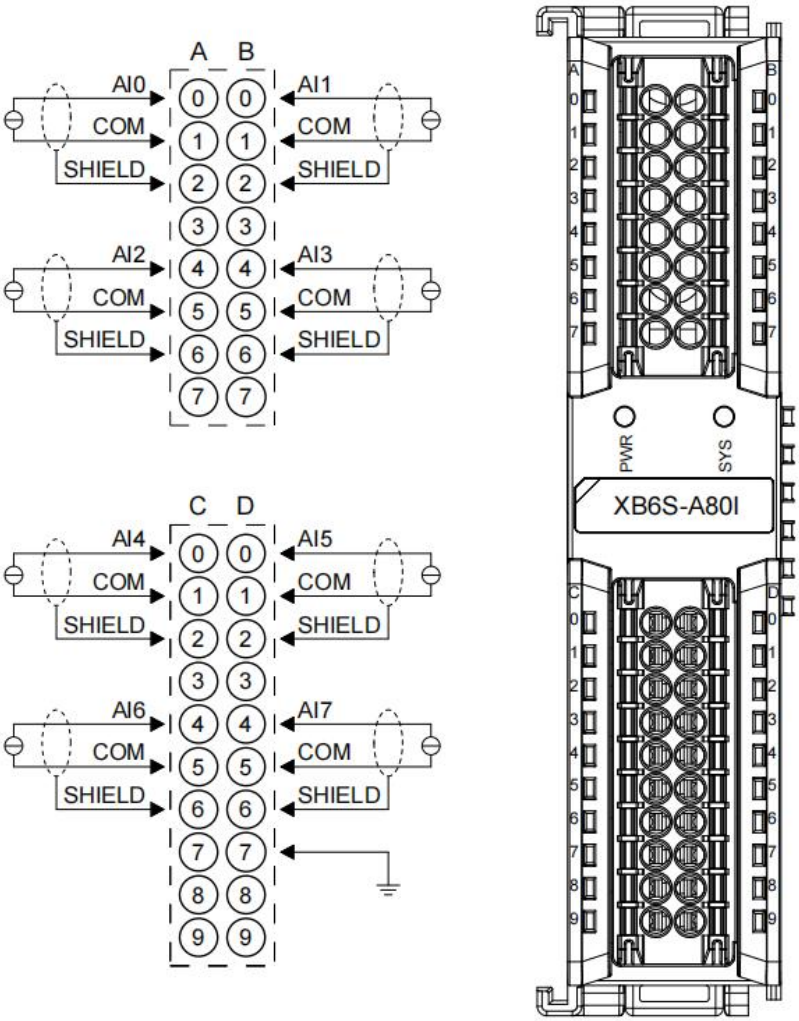

*COM is internally conductive, SHIELD is internally conductive

*All channel loads must be from the same source

* Shielded twisted pair cables are recommended for signal cables

3.3.6.7 XB6S-A40ID

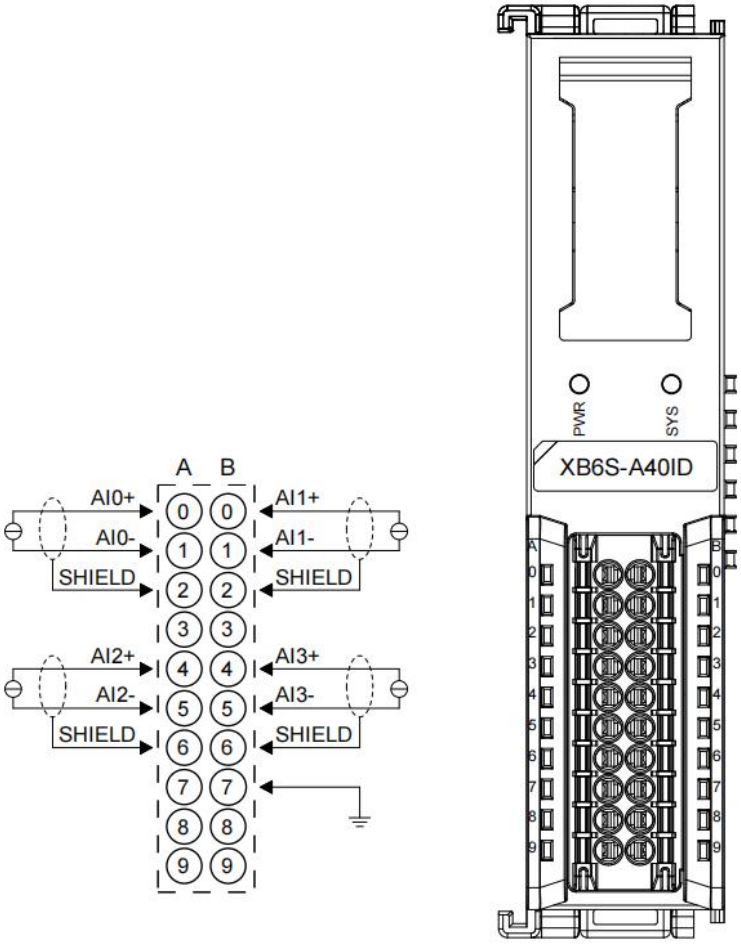

*All SHIELD internal conduction

*It is recommended to use shielded twisted pair cables, connect the shield layer to the SHIELD port, and ground it reliably

3.3.6.8 XB6S-A40I

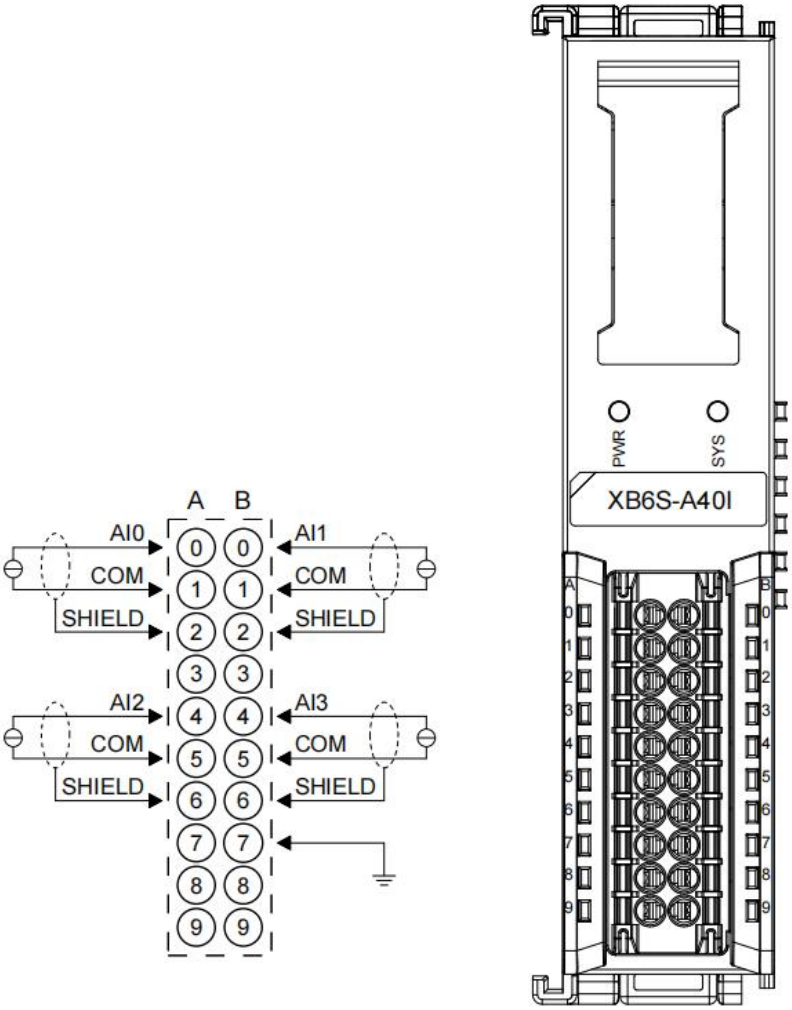

*COM is internally conductive, SHIELD is internally conductive

*All channel loads must be from the same source

* Shielded twisted pair cables are recommended for signal cables

3.3.6.9 XB6S-A08V

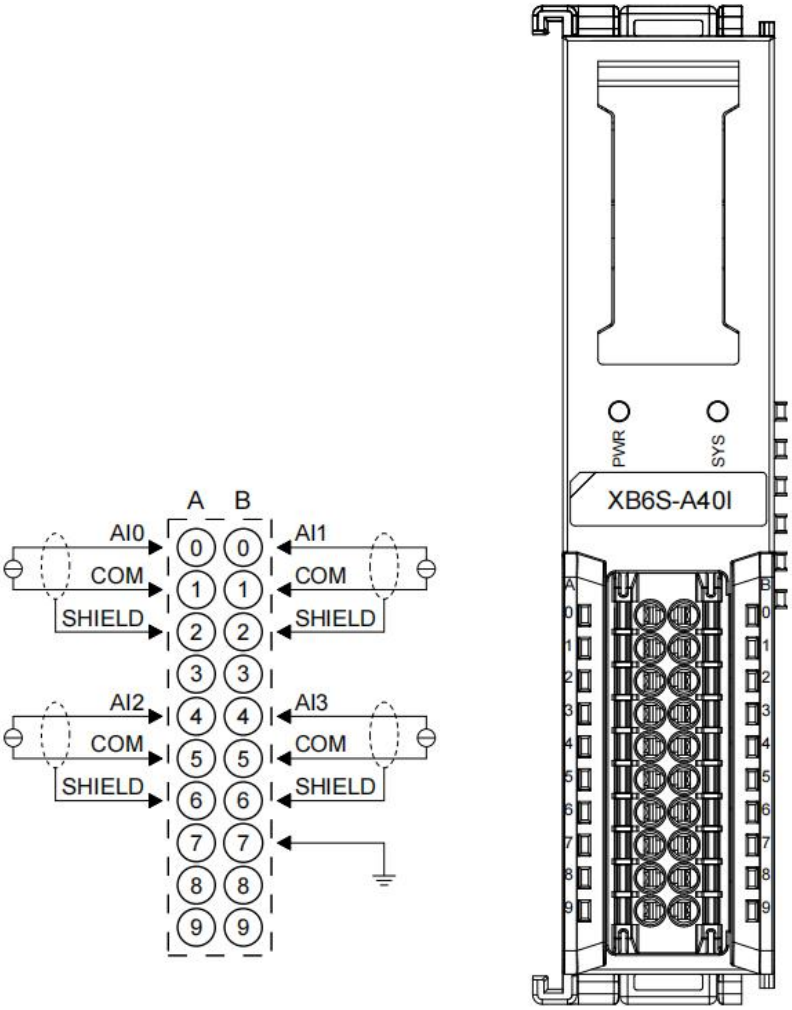

*COM is internally conductive, SHIELD is internally conductive

*All channel loads must be from the same source

* Shielded twisted pair cables are recommended for signal cables

3.3.6.10 XB6S-A04V

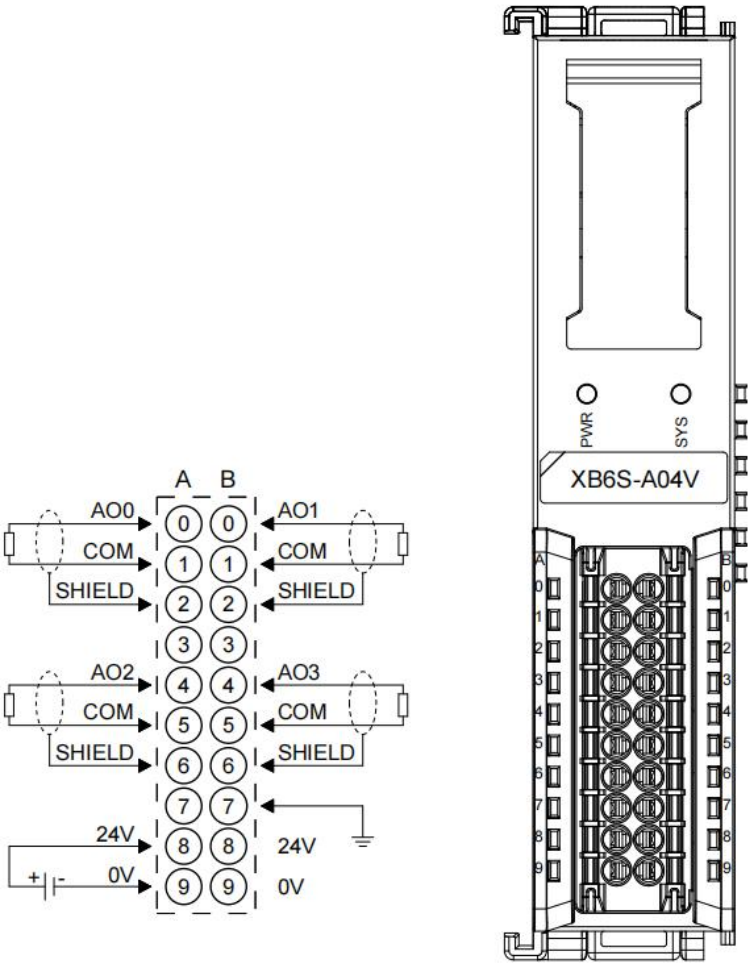

*COM is internally conductive, SHIELD is internally conductive

*All channel loads must be from the same source

* Shielded twisted pair cables are recommended for signal cables

3.3.6.11 XB6S-A08I

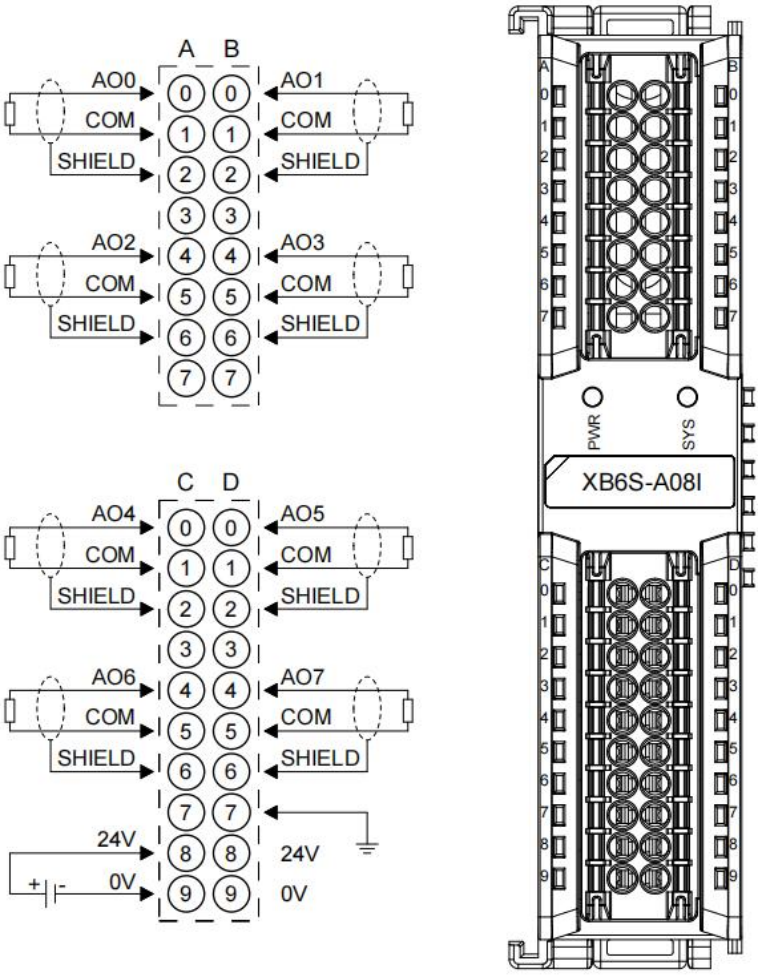

*COM is internally conductive, SHIELD is internally conductive

*All channel loads must be from the same source

* Shielded twisted pair cables are recommended for signal cables

3.3.6.12 XB6S-A04I

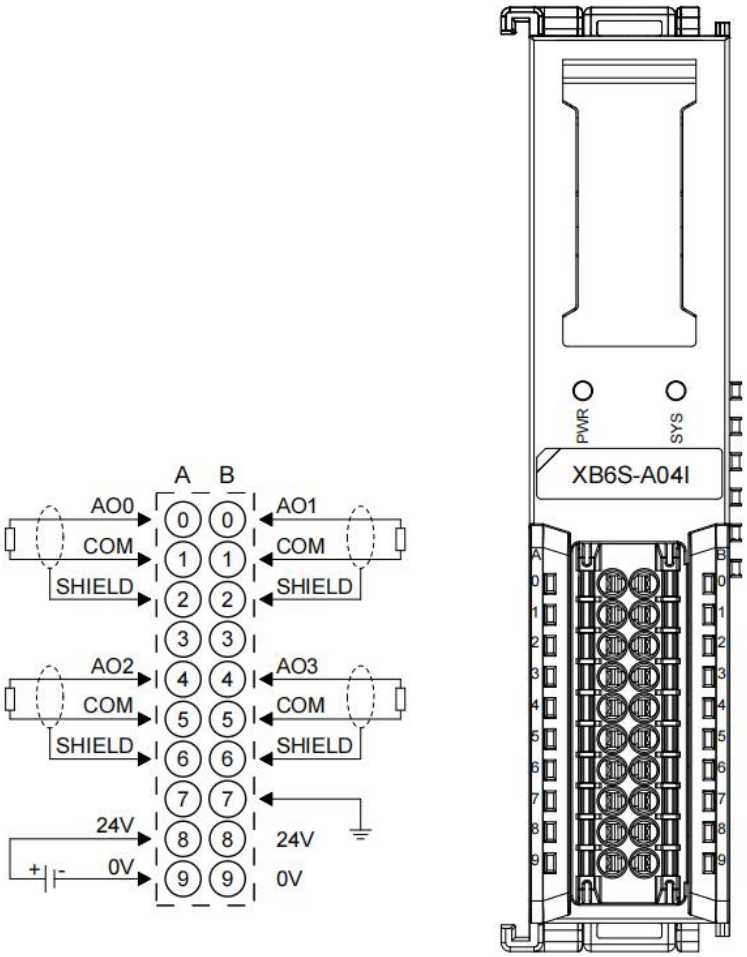

*COM is internally conductive, SHIELD is internally conductive

*All channel loads must be from the same source

* Shielded twisted pair cables are recommended for signal cables

3.3.7 Dimensions

4-channel analog I/O module dimensions (in mm)

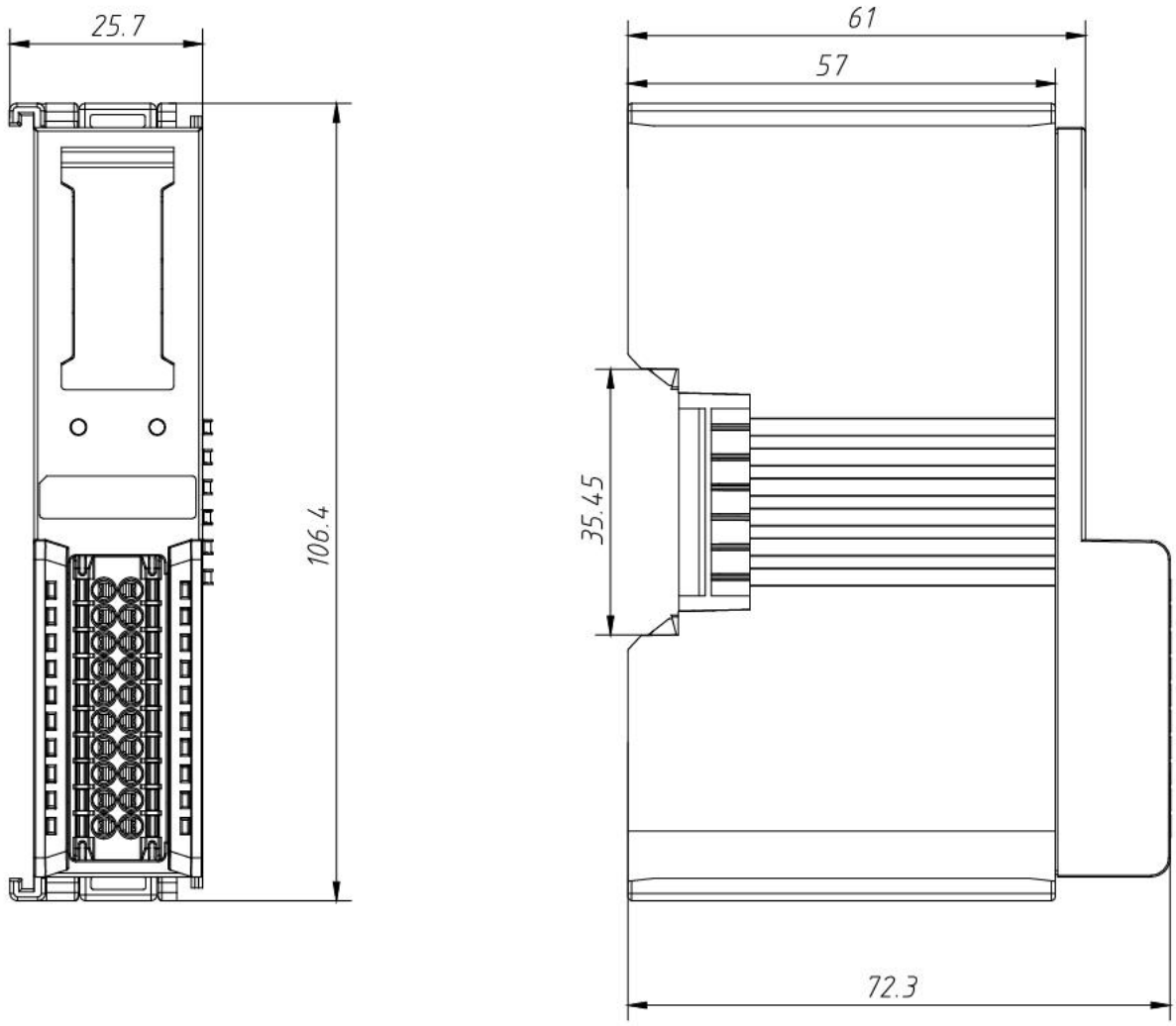

8-channel analog I/O module dimensions (in mm)

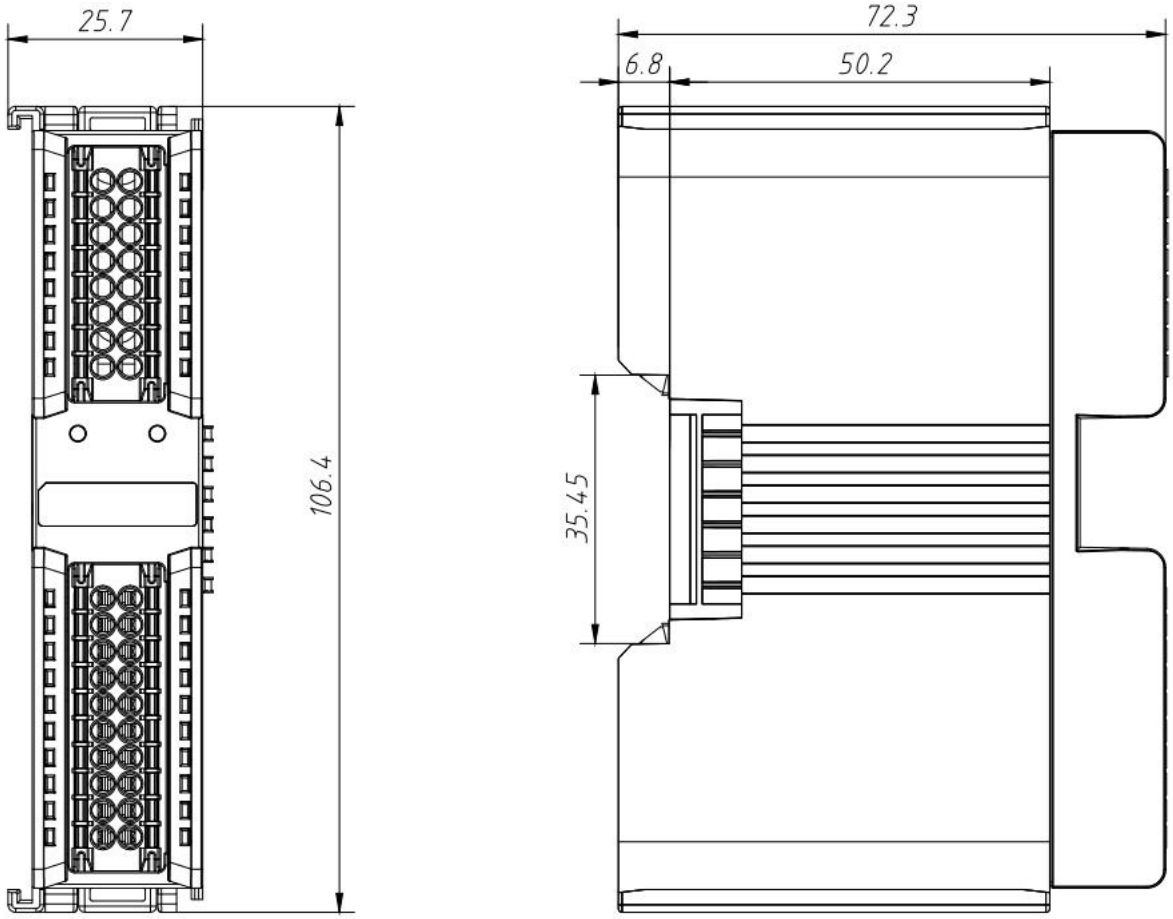

3.4 Extension power module

3.4.1 Panel structure

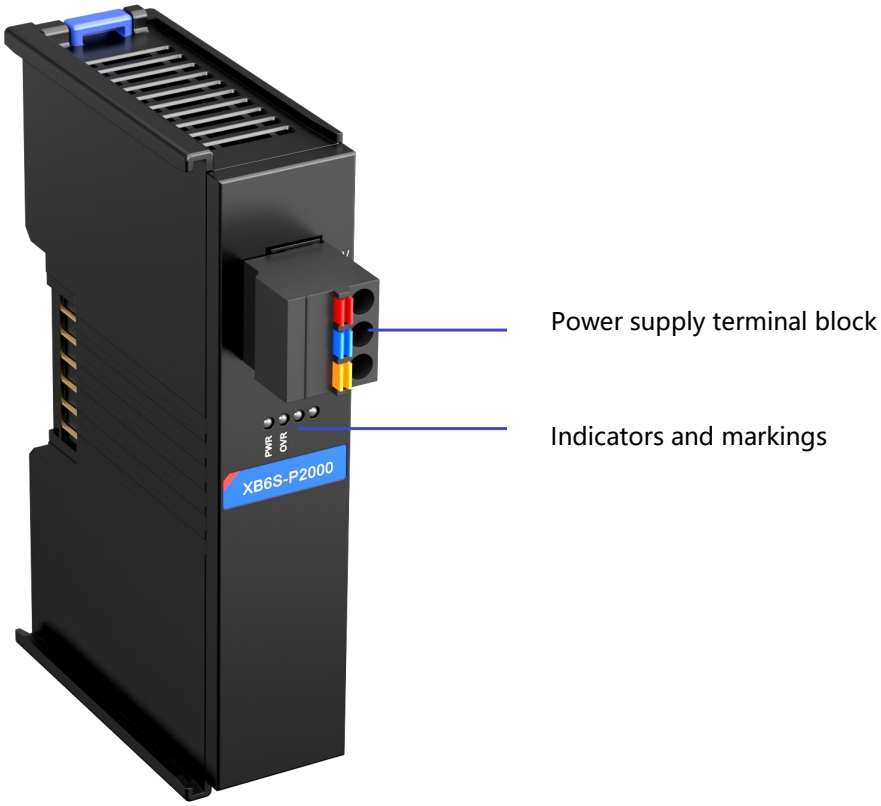

3.4.2 Indicator light function

Definition of indicator lights on the extended power module				
Logo	**name**	**color**	**state**	**Status description**
PWR	Power indicator	green	Always on	The module power supply is working properly
			Off	The module is not powered or the power supply is abnormal.
OVR	Overload indicator light	red	Off	Not overloaded
			Always on	The load reaches more than 90% (±5%)

3.4.3 Technical Parameters

Power parameters	
Input voltage	SELV Input 24VDC (18V~36V)
Input Current	600mA (24VDC)
Output voltage	5VDC
Output Current	2A
General technical parameters	
Specifications and dimensions	106.4 × 25.7 × 61mm
weight	110g
Operating temperature	-20℃~+60℃
Storage temperature	-40℃~+80℃
Relative humidity	95%, non-condensing
Altitude	≤2000m
Pollution degree	Level 2
Short circuit protection	Support (automatic recovery mechanism)
Reverse polarity protection	Support (automatic recovery mechanism)
Surge protection	support
Protection level	IP20
Safety Certification	UL certification, CE certification
Green certification	RoHS certification, REACH certification

3.4.4 Wiring Diagram

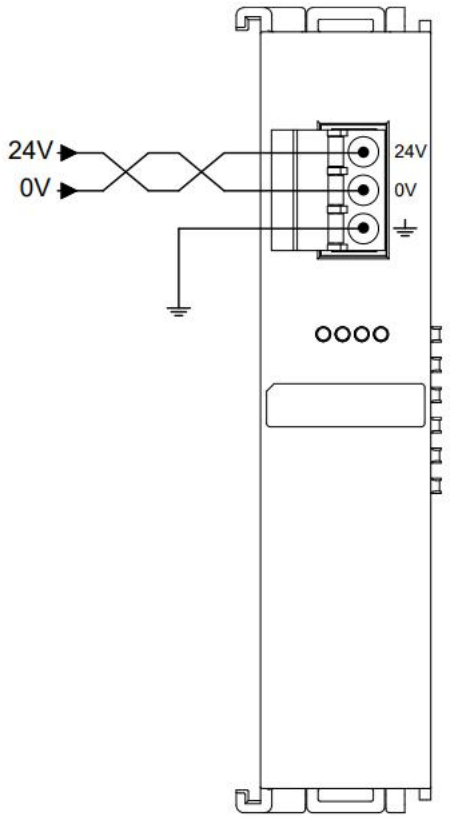

3.4.5 Dimensions

Extended power supply dimensions (in mm)

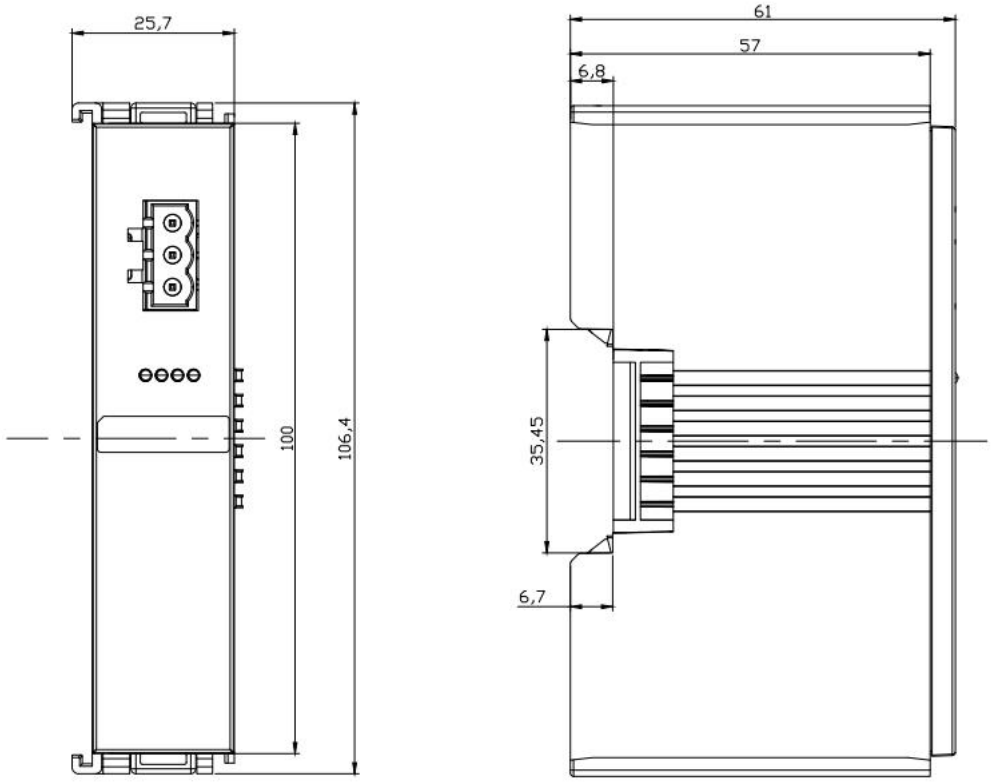

3.5 Common terminal expansion module

3.5.1 Technical Parameters

Common terminal parameters	
Rated voltage	24VDC (18V~36V)
Rated current	8A
Number of common terminals	2 groups
General technical parameters	
Specifications and dimensions	106.4 × 25.7 × 72.3mm
weight	95g
Operating temperature	-20℃~+60℃
Storage temperature	-40℃~+80℃
Relative humidity	95%, non-condensing
Altitude	≤2000m
Pollution degree	Level 2
Protection level	IP20
Safety Certification	UL certification, CE certification
Green certification	RoHS certification, REACH certification

3.5.2 Wiring Diagram

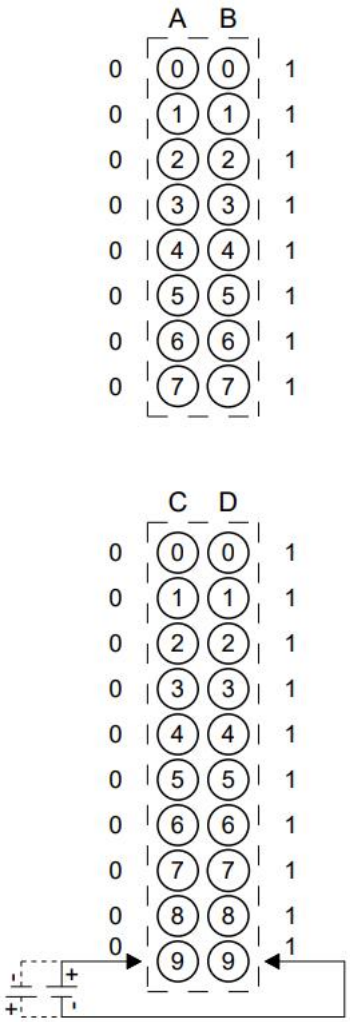

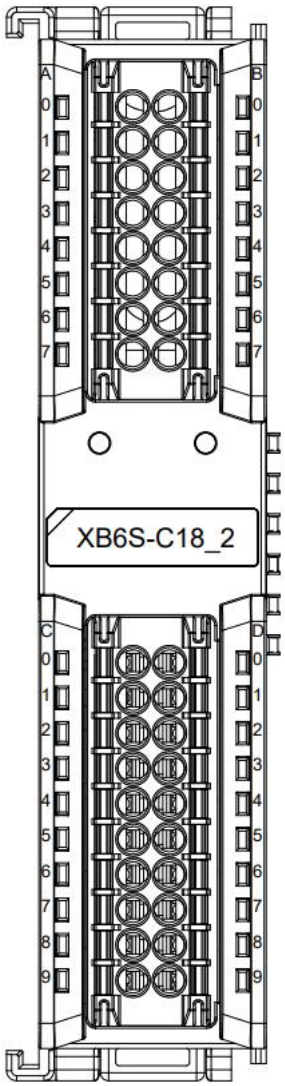

* Channel ID 0, internal conduction
* Channel ID 1, internal conduction

3.5.3 Dimensions

Dimensions (unit: mm)

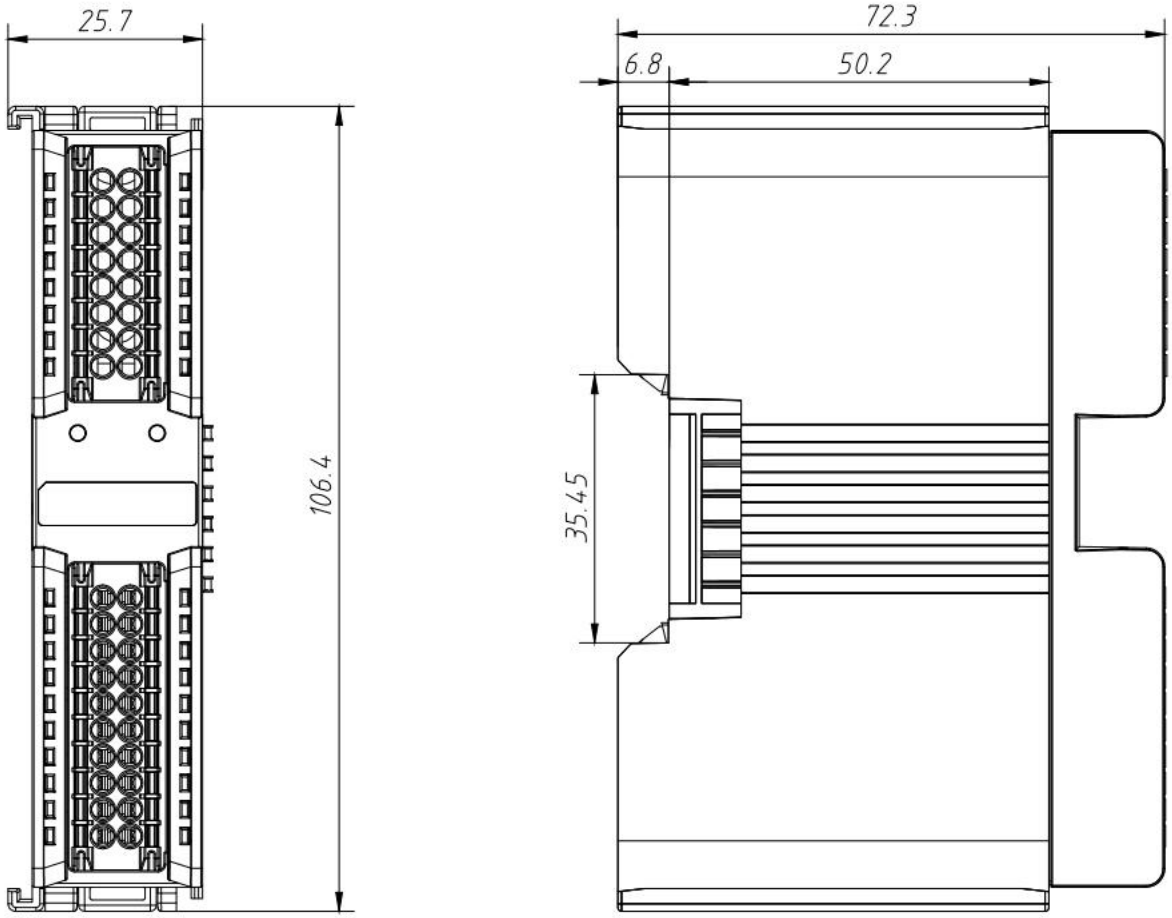

3.6 End cap

3.6.1 Dimensions

End cap dimensions (unit: mm)

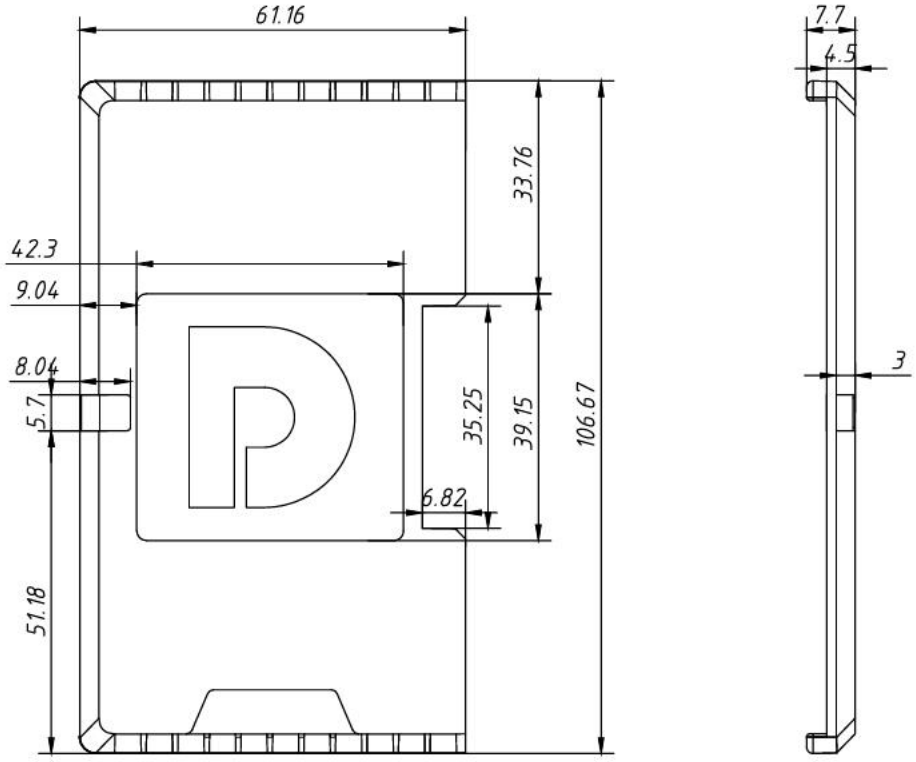

Note: All are installed using DIN 35 mm standard rails, with DIN rail specifications of 35*7.5*1.0 and 35*15*1.0 (unit: mm).

4 Installation and removal

4.1 Installation Guide

Installation/removal precautions

- **The module protection level is IP20. The module needs to be installed in a cabinet and used indoors.**
- **Ensure that the cabinet has good ventilation measures (such as installing an exhaust fan in the cabinet).**
- **Do not install this device near or over any equipment that may cause overheating.**
- **Be sure to install the module vertically on the fixed rail and maintain air circulation around it (there should be at least 50 mm of air circulation space above and below the module).**
- **After the module is installed, be sure to install the guide rail fixings at both ends to secure the module.**
- **Installation/removal must be performed with the power turned off.**
- **After the module is installed, it is recommended to connect and route the cables in an up-and-down manner.**

warn

- If used in a manner not specified in the product user manual, the protection provided by the equipment may be impaired.

Module installation diagram, minimum clearance between top and bottom (≥ 50mm)

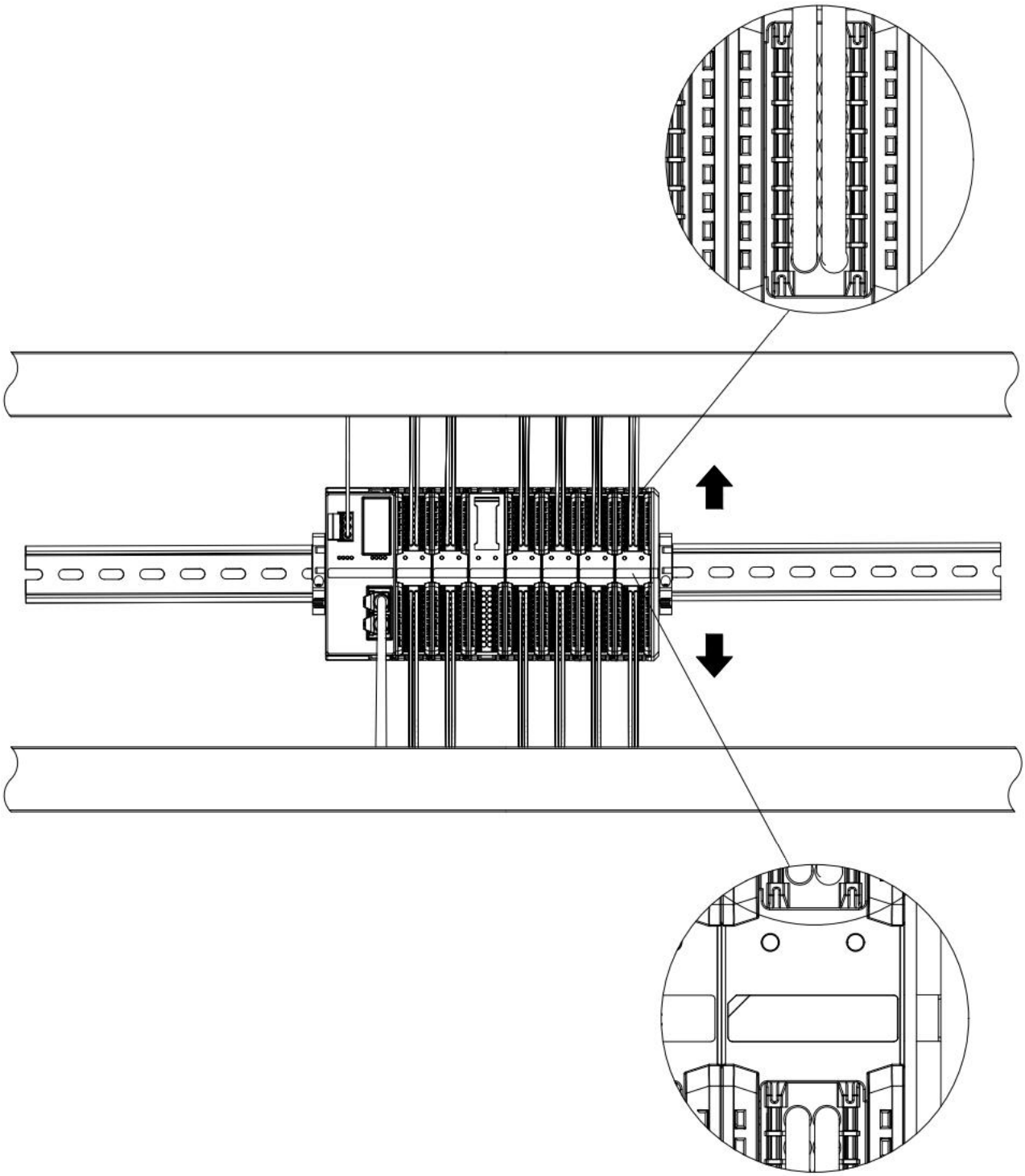

Ensure the module is installed vertically on the fixed rail

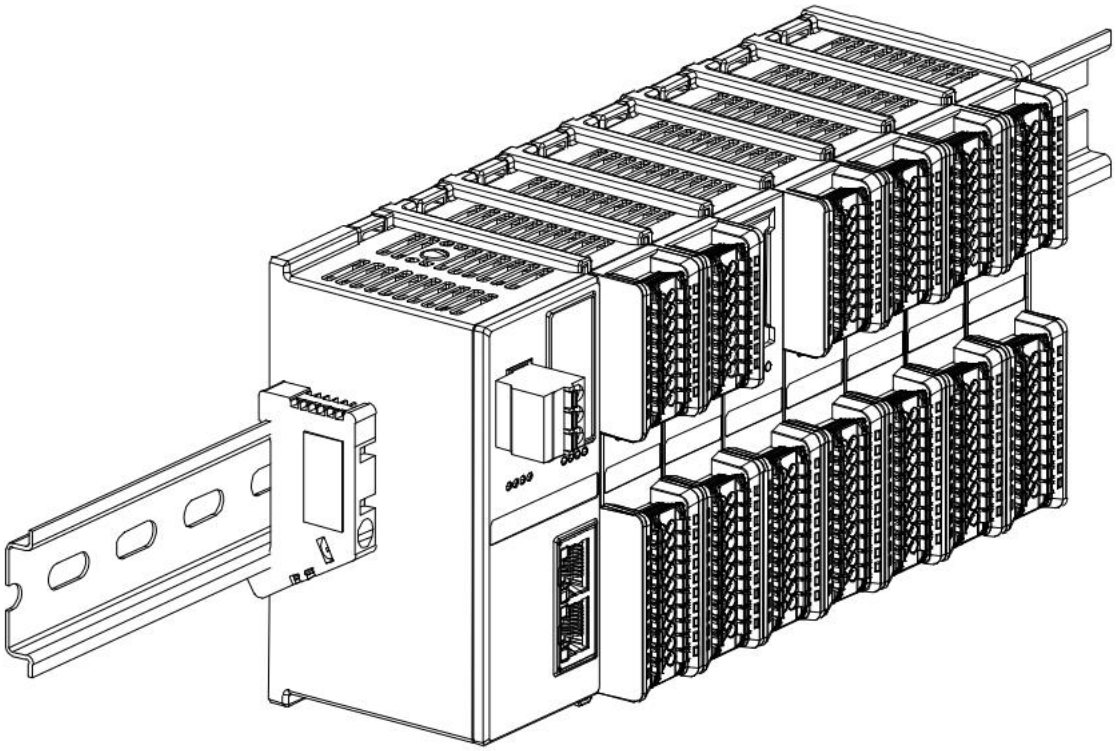

Be sure to install the rail fixings

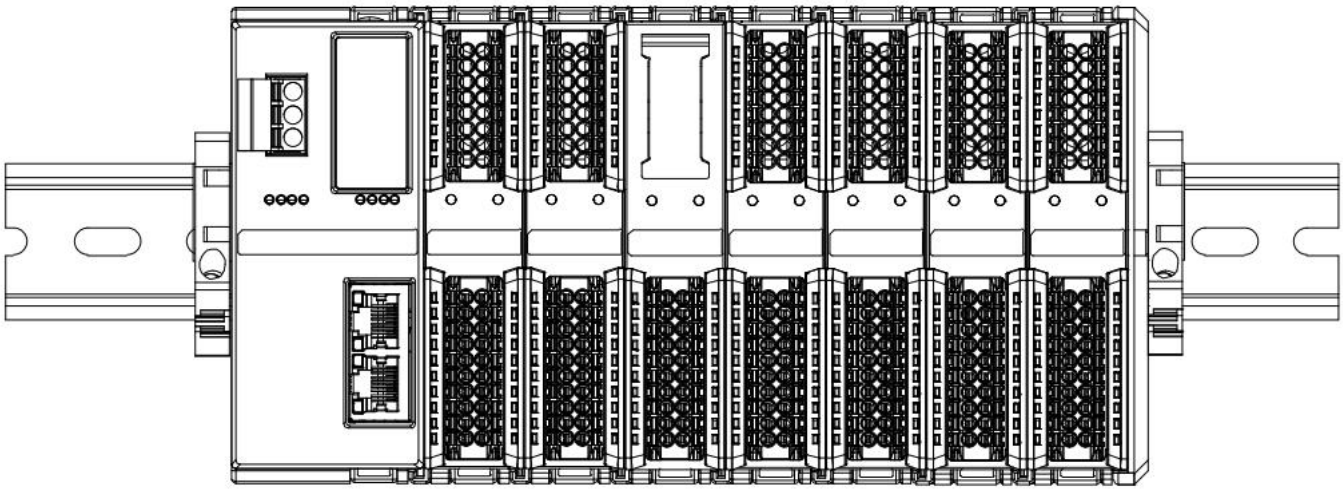

Module upper and lower wiring diagram

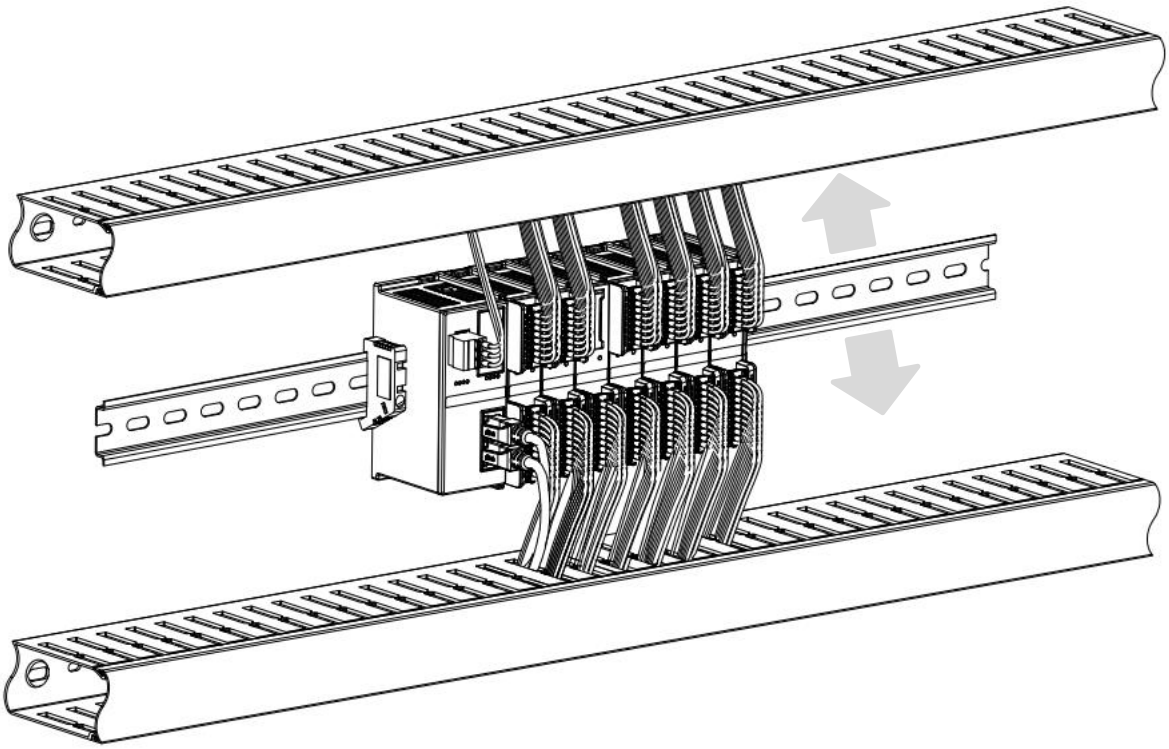

4.2 Installation and removal steps

Module installation and removal	
Module installation steps	1. Install the coupler module on the fixed guide rail first.
	2. Install the required I/O modules or functional modules in sequence on the right side of the coupler module.
	3. After installing all required modules, install the end cap to complete the module assembly.
	4. Install the guide rail fixings at both ends of the coupler module and the end cap to fix the module.
Module disassembly steps	1. Loosen the guide rail fixings at both ends of the module.
	2. Use a flat-blade screwdriver to pry open the module buckle.
	3. Pull out the disassembled module.

4.3 Installation and disassembly diagram

Coupler module installation

- Align the coupler module vertically with the guide rail slot, as shown in Figure ① below.

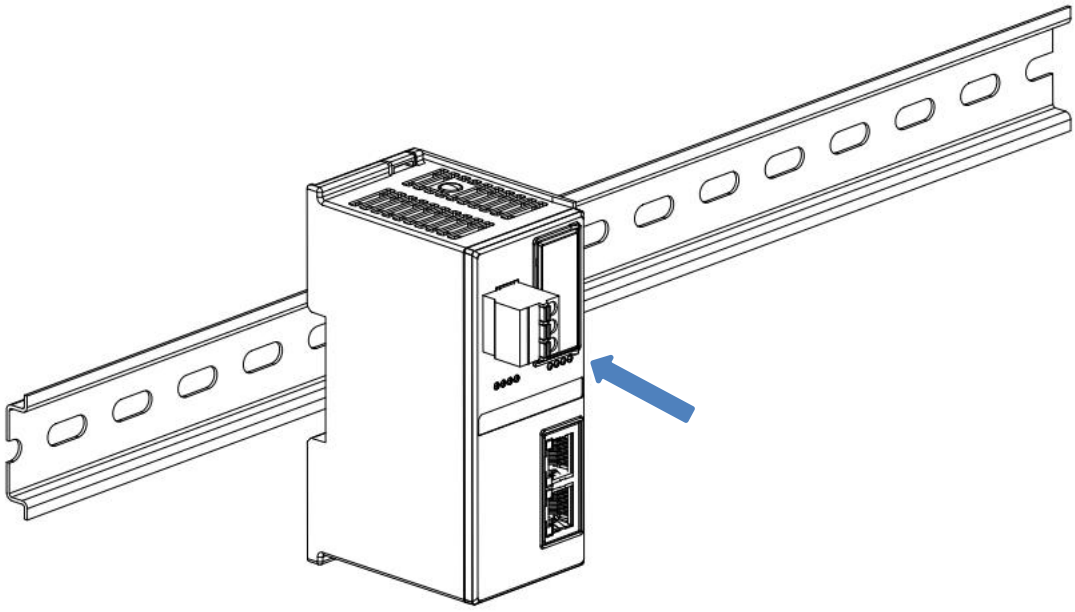

①

- Press the coupler module in the direction of the guide rail with force until you hear a "click" sound, and the module is installed in place, as shown in Figure ② below.

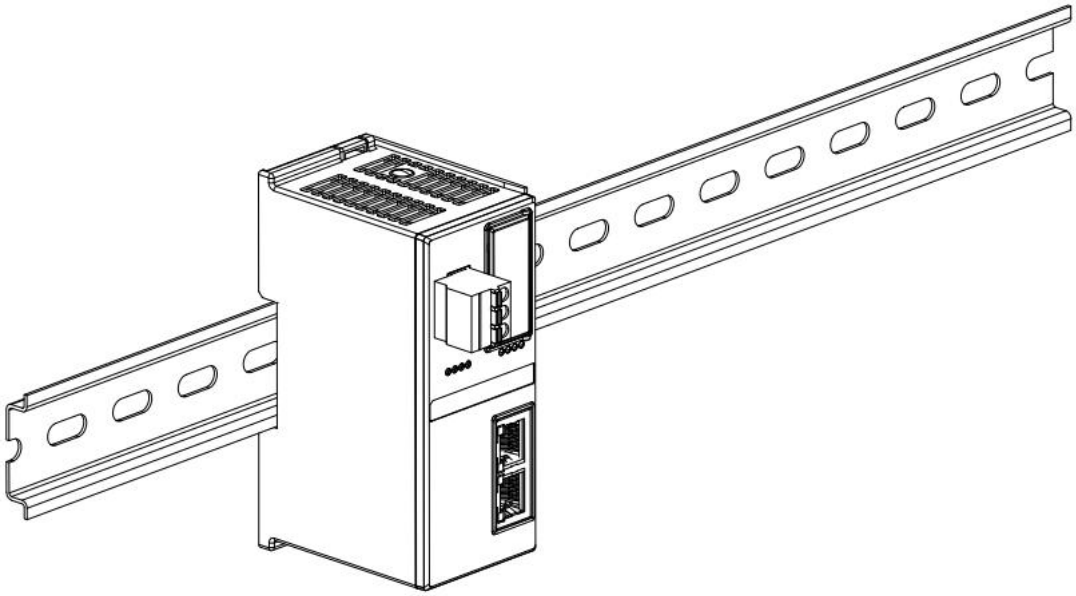

②

I/O Module Installation

- Follow the steps above to install the coupler module and install the required I/O modules or functional modules one by one. Push them in as shown in Figures ③, ④, and ⑤ below. When you hear a "click", the module is installed in place.

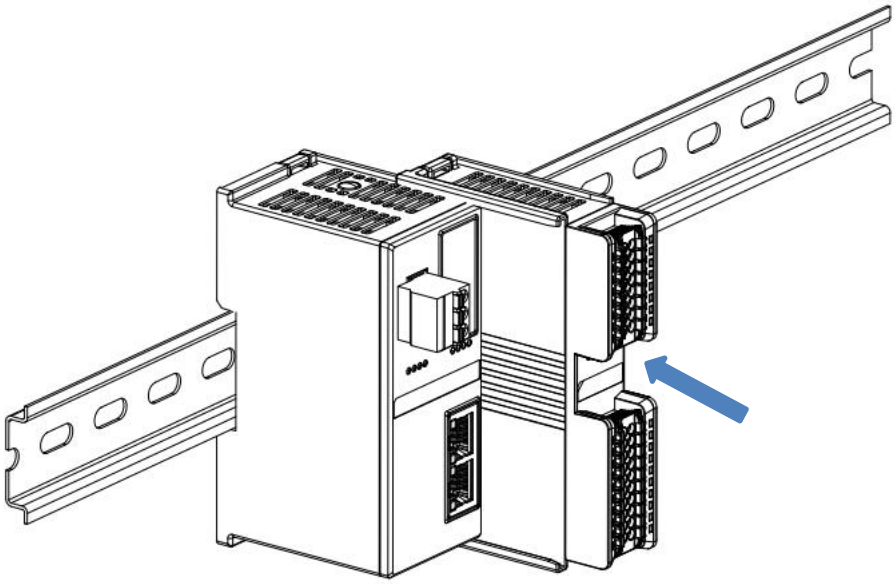

③

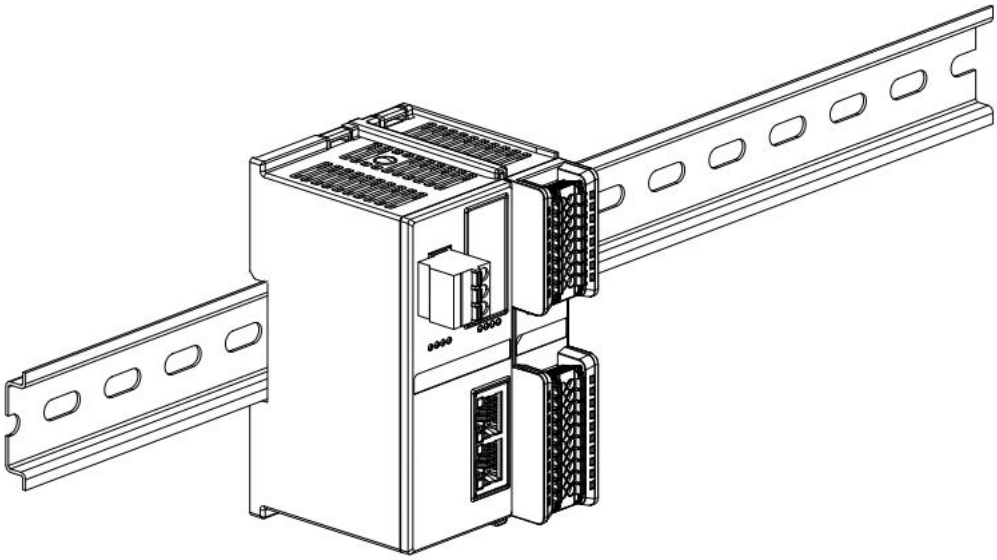

④

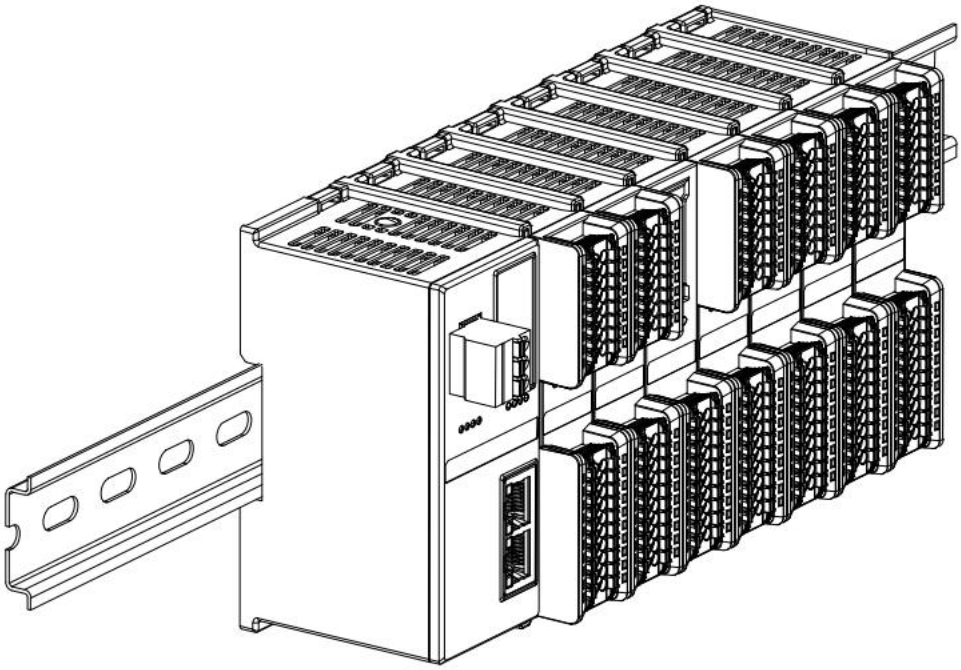

⑤

End cap installation

- Install the end cap on the right side of the last module, aligning one side of the end cap groove with the guide rail. For installation, refer to the installation method of the I/O module and push the end cap inwards into place, as shown in Figure ⑥ below.

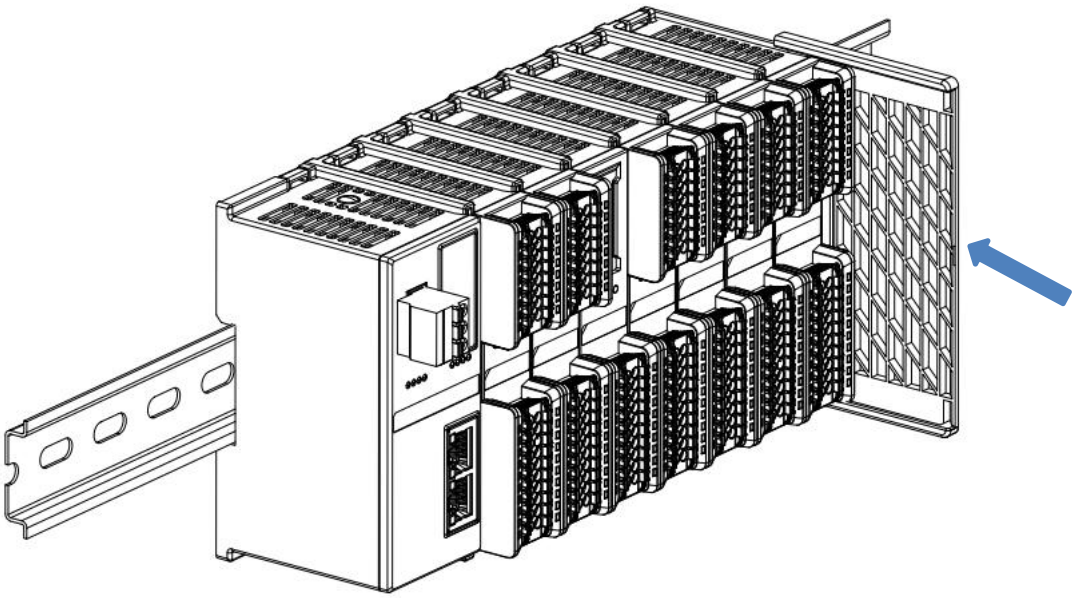

⑥

- After the end cap is installed, check whether the front of the entire module is flat, and ensure that all modules and end covers are installed in place and the front is flush, as shown in Figure ⑦ below.

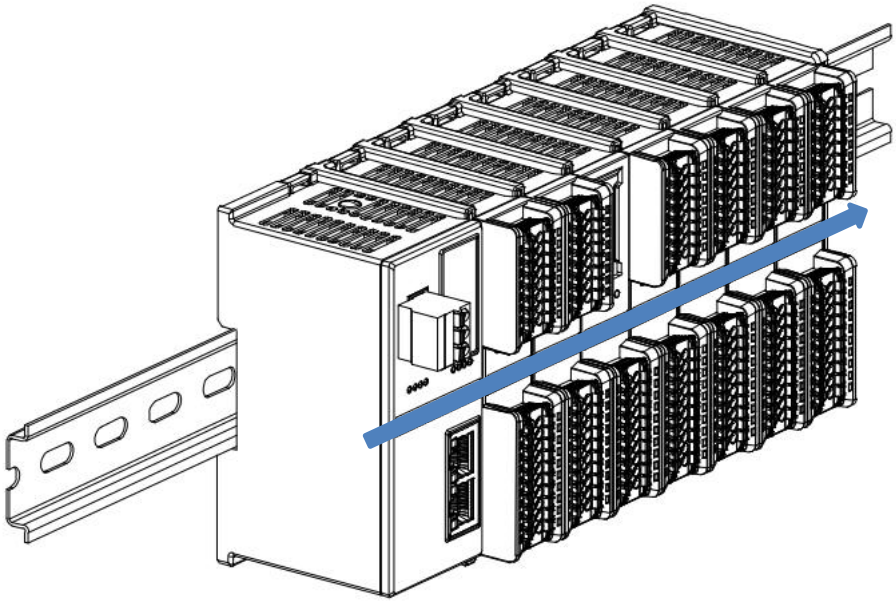

⑦

Guide rail fixing installation

- Install and tighten the guide rail fixings close to the left side of the coupler, as shown in Figure ⑧ below.

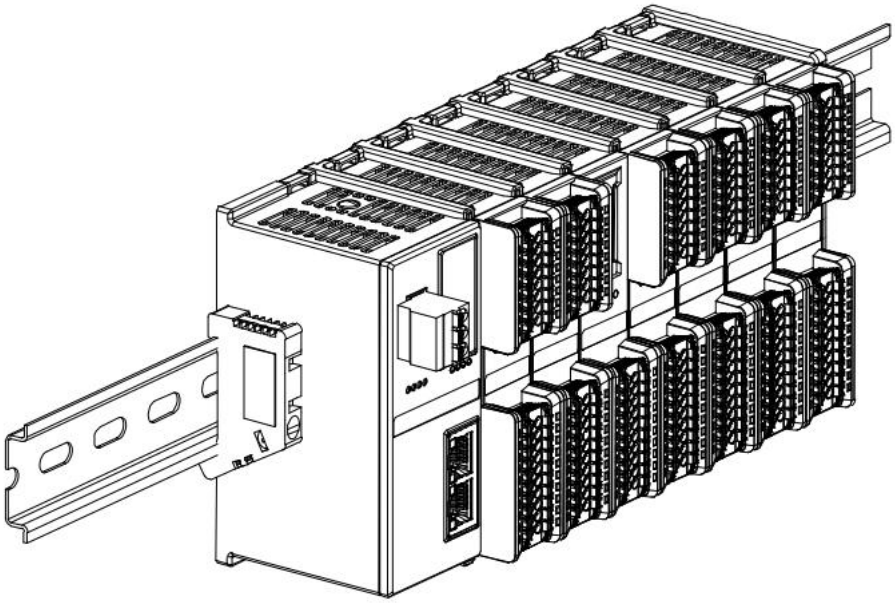

⑧

- Install the rail fixing on the right side of the end cap. First push the rail fixing toward the coupler to ensure that the module is installed firmly, and then tighten the rail fixing with a screwdriver, as shown in Figure ⑨ below.

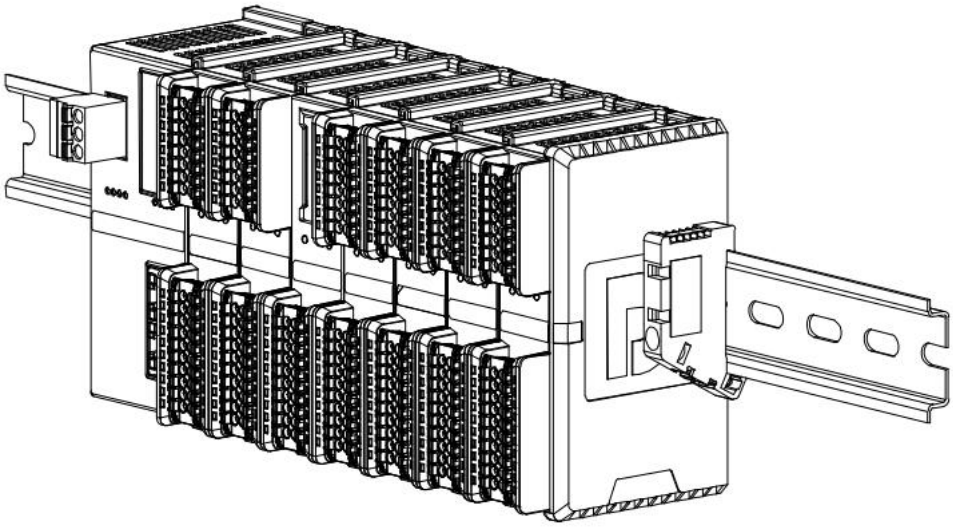

⑨

Disassembly

- Use a screwdriver to loosen the guide rail fixing at one end of the module and move it to one side to

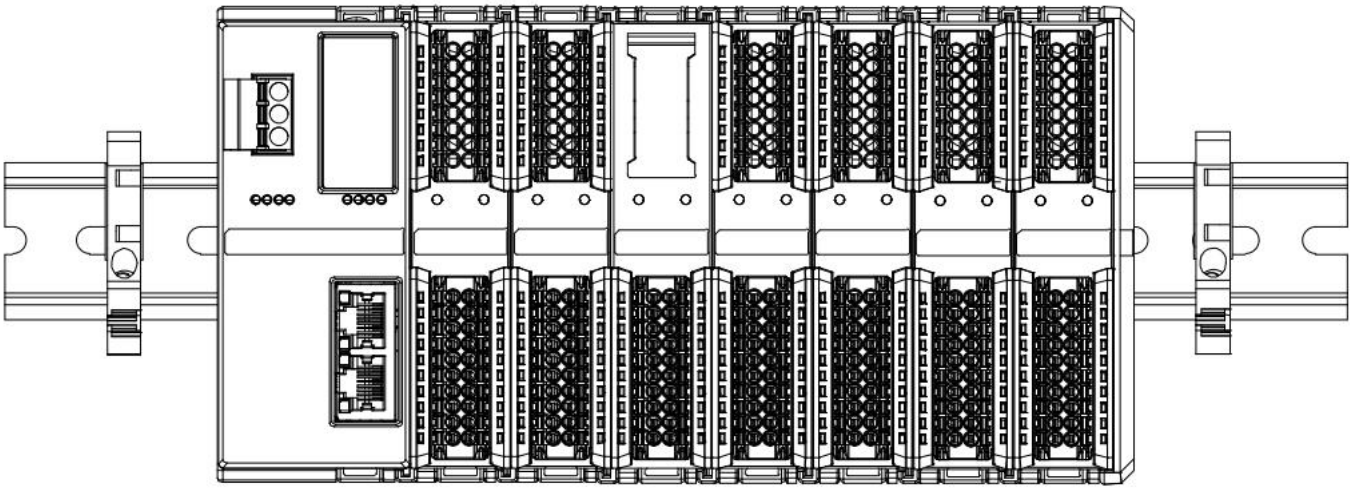

ensure that there is a gap between the module and the guide rail fixing, as shown in Figure ⑩ below.

⑩

- Insert a flat-head screwdriver into the buckle of the module to be removed, and apply force sideways in the direction of the module (until you hear a sound), as shown in the following figure⑪and⑫Note: Each module has a buckle on the top and bottom, and the same method is used for both.

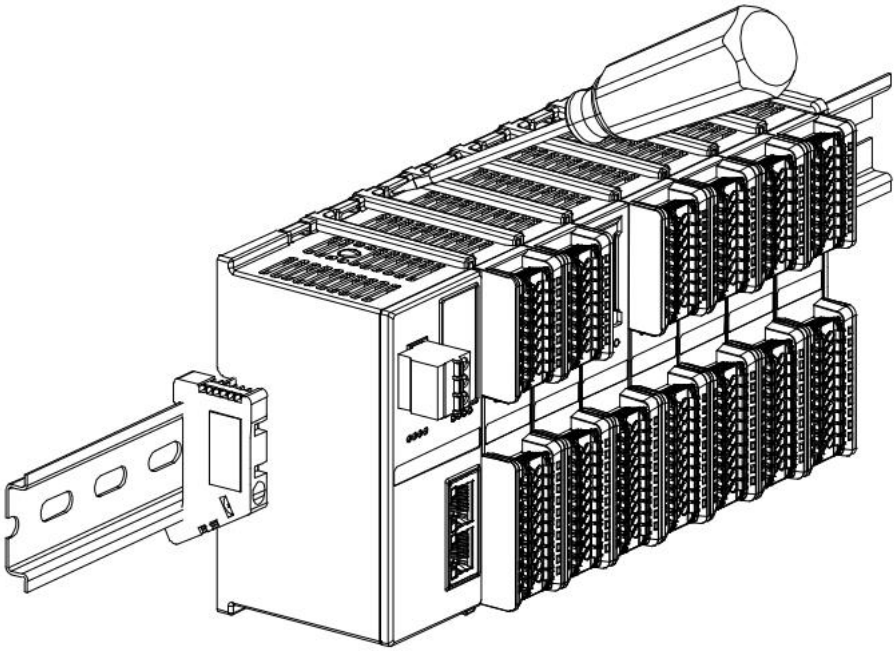

⑪

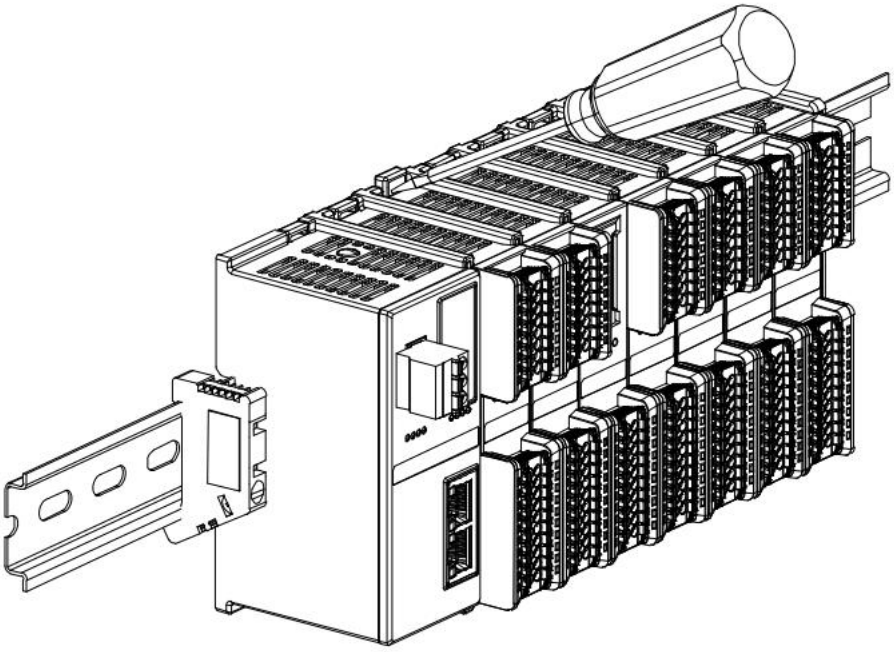

⑫

- Follow the opposite operation of installing the module to disassemble the module, as shown below⑬shown.

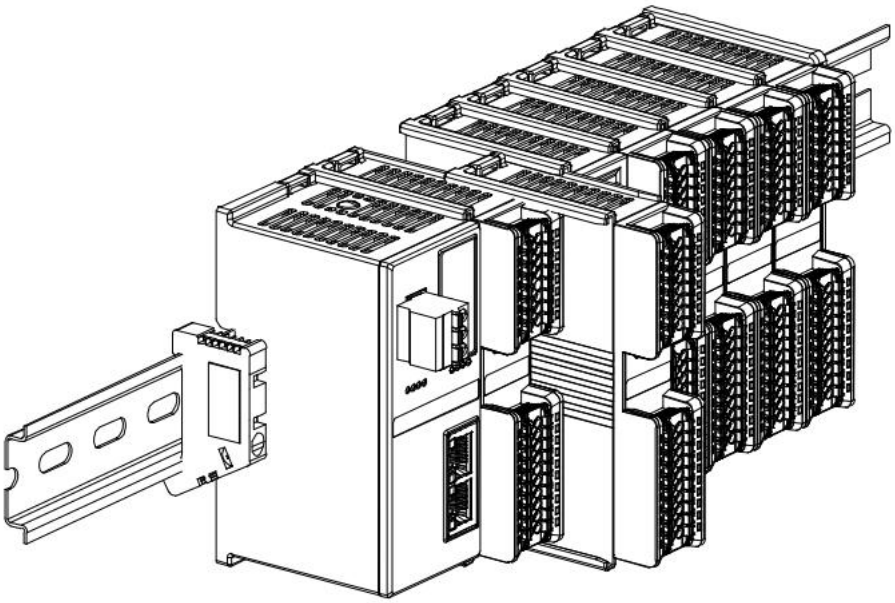

⑬

5 Wiring

5.1 Terminal Blocks

warn

Terminal Blocks		
Power Terminals	Rated voltage	320V
	Rated current	20A
	Number of poles	3P
	Wire diameter	twenty two~16 AWG 0.3~1.5 mm²
Signal line terminals (i.e. input and output terminals)	Rated voltage	200V
	Rated current	9.5A
	Number of poles	16P+20P
	Wire diameter	twenty two~17 AWG 0.3~1.0 mm²
Bus interface	2 × RJ45	Category 5 or higher UTP or STP (STP is recommended)

5.2 Wiring Instructions and Requirements

Power Wiring Precautions

- The module system side power supply and field side power supply are configured and used separately. Do not mix them.
- Reliable grounding is required.

Wiring tool requirements

The power terminals and signal line terminals adopt a screw-free design, and the cables can be installed and removed using a flat-blade screwdriver (specification: ≤3mm).

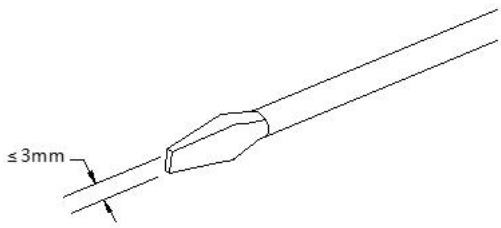

Stripping length requirements

The recommended cable stripping length for power and signal line terminals is 10 mm.

Wiring method

For single-strand rigid wire, after stripping the wire to the corresponding length, press the button and insert the single-strand wire directly into the corresponding end hole.

For multi-strand flexible wires, after stripping the wires to the corresponding length, you can directly connect or use the corresponding standard specifications of cold-pressed terminals (tubular insulated terminals, reference specifications are shown in the following table) in combination. Press the button and insert the insulated terminal directly into the corresponding end hole.

The specifications of power terminals and signal line terminals are shown in the following table:

Specifications of tubular insulation terminals		
Specifications	model	Conductor cross-sectional area mm²
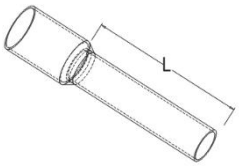 Tube type insulated terminalLThe length is10mm	E0310	0.3
	E0510	0.5
	E7510	0.75
	E1010	1.0
	E1510	1.5

warn

- Only copper wires may be used for wiring.

warn

- Cable temperature: 80℃.

5.3 Wiring Instructions for MIL Connector Type Modules

5.3.1 Compatible product list

MIL connector type I/O modules need to be connected to the terminal block through a cable with a connector for use.

Model	Description	Adapter terminal block	Adapter cable
XB6S-3200N	32-channel digital input, NPN/PNP compatible	TM40-32AE	TM40-XXXX-1 TM40-XXXX-1S
		TM40-32BE	TM40-XXXX-2 TM40-XXXX-2S
XB6S-0032AN	32-channel digital output, NPN type	TM40-32AE	TM40-XXXX-1 TM40-XXXX-1S
XB6S-0032BN	32-channel digital output, PNP type	TM40-32BE	

Note: TM40-XXXX-2/TM40-XXXX-2S cables are dedicated to PNP input and cannot be used with other types of input/output.

5.3.2 Terminal Block Naming Rules

The terminal blocks of this product include TM40-32AE and TM40-32BE. The naming rules are as follows.

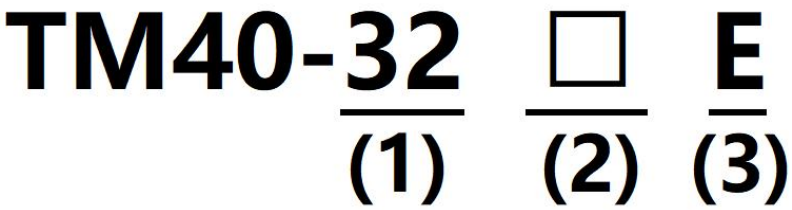

serial number	meaning	Options	illustrate
(1)	Number of terminal blocks	32	32 points
(2)	Input/Output Type	A	NPN type input/output
		B	PNP type input/output
(3)	Terminal block type	E	European terminal block

5.3.3 Cable Naming Rules

The terminal blocks and I/O connection cables of this product include TM40-XXXX-1, TM40-XXXX-1S, TM40-XXXX-2, and TM40-XXXX-2S. The naming rules are as follows.

TM 40- □ □ □ □ - □ □

(1) (2) (3)

serial number	meaning	Options	illustrate
(1)	Cable length	0500~1500	Cable custom length range, unit: mm
(2)	Cable function	1	adaptation: NPN type input PNP type output NPN type output
		2	PNP type input only
(3)	Cable shielding	S	Shielded Cable
		default	Unshielded Cable

Note: TM40-XXXX-2/TM40-XXXX-2S cables are dedicated to PNP input and cannot be used with other types of input/output.

5.3.4 Terminal block parameters

Technical specifications	
Rated current	1A
Rated voltage	DC24V
Suitable for wires	1.5mm2/AWG16 or below

5.3.5 Cable parameters

Technical specifications	
Wire Gauge	AWG28
Conductor composition	7/0.127
Conductor material	Soft copper wire
Insulation Materials	PE
Core twisting	Filling, cotton string, strapping, paper bag
Surface Covering	PVC
Conductor impedance (20℃)	239Ω/Kn or less
Withstand voltage (in air)	AC500V/min

Insulation resistance (20℃)	50MΩ/Kn or more

5.3.6 Configuring rules

- Configuration examples for NPN type input, NPN type output, and PNP type output

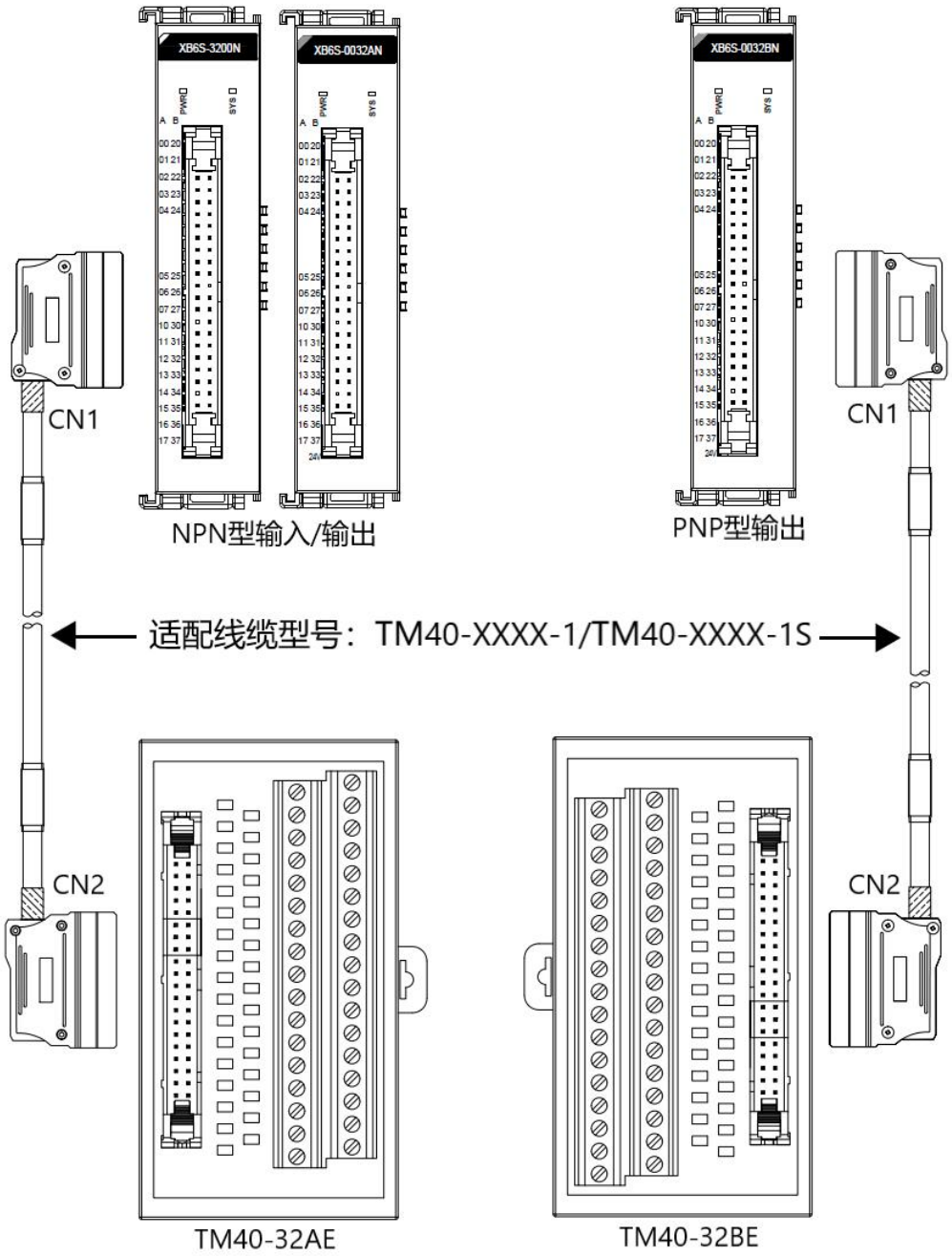

Both ends of the cable are marked with CN1 and CN2. The I/O side is connected to the CN1 end, and the terminal block side is connected to the CN2 end.

- Configuration example for PNP type input

  When using the XB6S-3200N PNP input, it must be used with the TM40-XXXX-2/TM40-XXXX-2S cable.

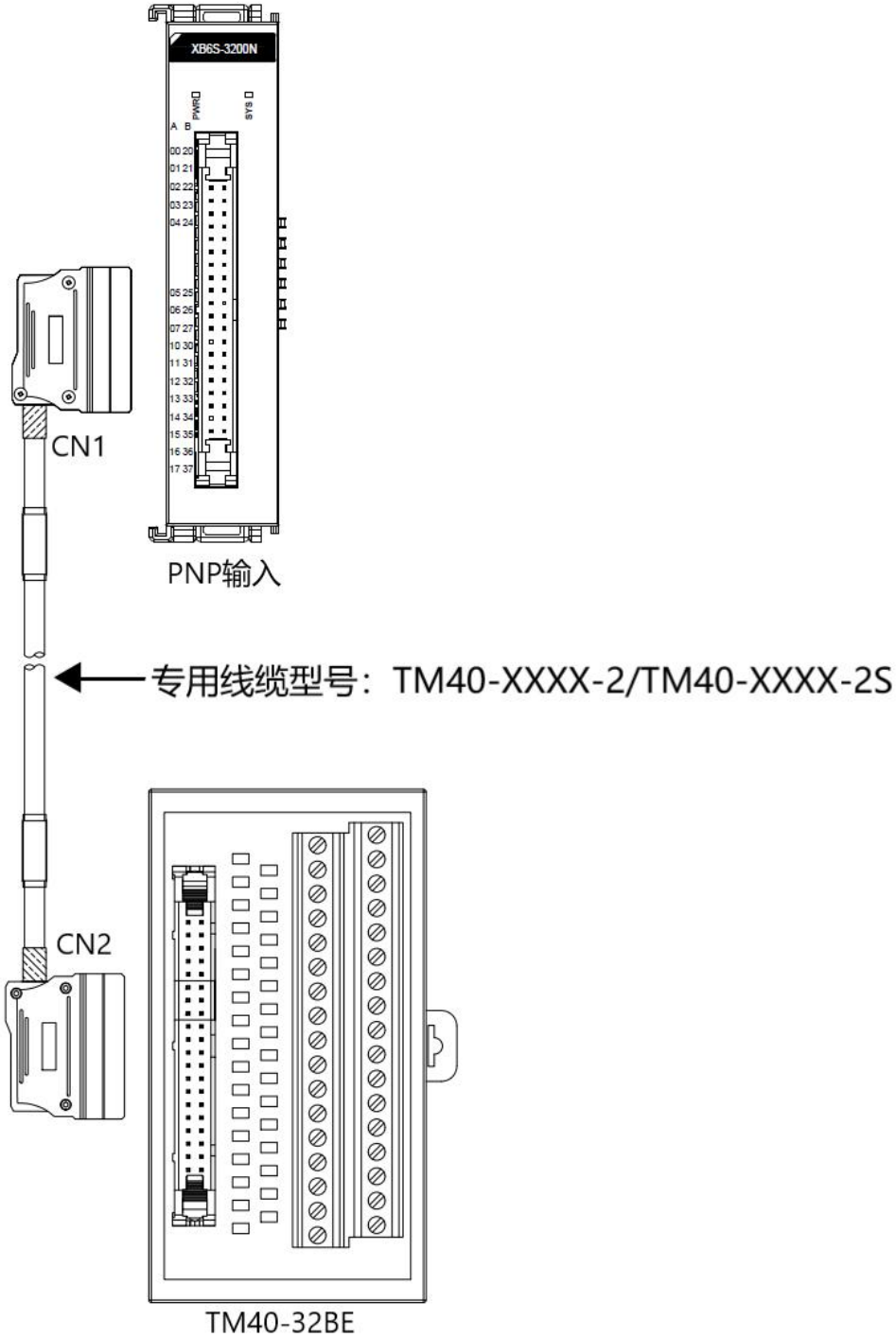

Both ends of the cable are marked with CN1 and CN2. The I/O side is connected to the CN1 end, and the terminal block side is connected to the CN2 end.

6 Use

6.1 IP settings and modifications

6.1.1 Setting the IP address via the rotary switches

- **When the IP address is set by the rotary switch from the factory**
  The IP address is 192.168.3.XXX (XXX is the setting value of the rotary switch, ranging from 1 to 254).
- **When setting the IP address by the rotary switch after the IP address has been set by the host computer**
  The IP address uses the high 3 bytes of the IP address set by the host computer, and the low 1 byte is the setting value of the rotary switch.
  For example, if you change the rotary switch setting after setting it to 172.10.0.12 on the host computer, the IP address will be 172.10.0.XXX (XXX is the setting value of the rotary switch, ranging from 1 to 254).

Precautions

- **For a description and operation of the rotary switch, see 3.1.3 Rotary switch.**
- **When the module leaves the factory, the rotary switch is set to "000" and the IP address is 192.168.3.253.**
- **Abnormal Rotation Switch setting: When rotation switch is set to a value other than 1 to 254, the module will start with the IP last modified by the host computer after it is powered on.**

6.1.2 Setting the IP address using GX Works3 software

a. The factory IP address of the module is 192.168.3.253. When connecting to the module for the first time, the IP addresses of the PLC and the module must be in the same network segment, otherwise the direct scan will fail. In the "CC-Link IE TSN Configuration" interface, click "Detect connected/disconnected devices", a dialog box pops up, click "Execute", and the connected module can be automatically added to the network, as shown in the figure below.

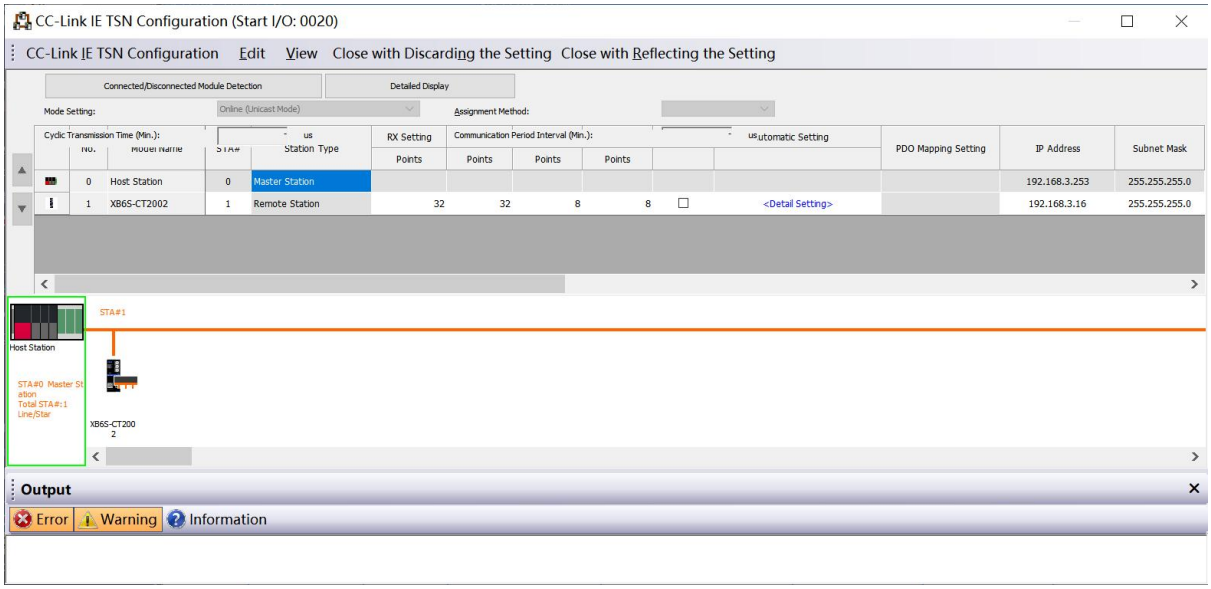

b. Right-click the slave device and select "Online -> Set IP Address", as shown below.

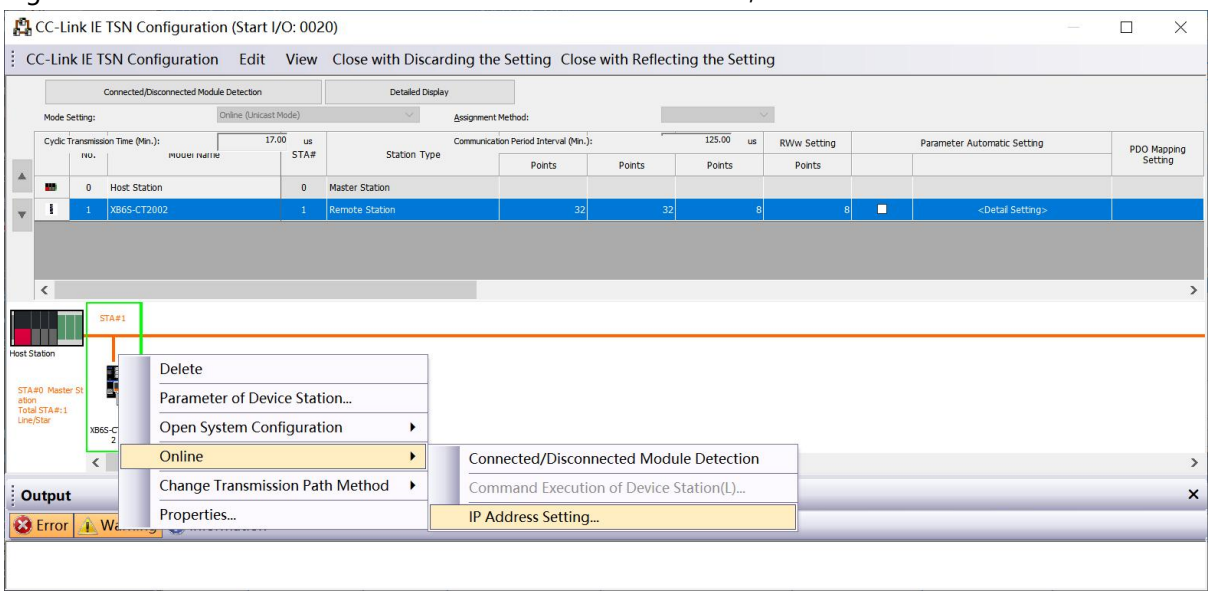

c. In the Set IP Address window, click the Detect Real Machine Information button, a dialog box pops up, click Execute, as shown in the following figure.

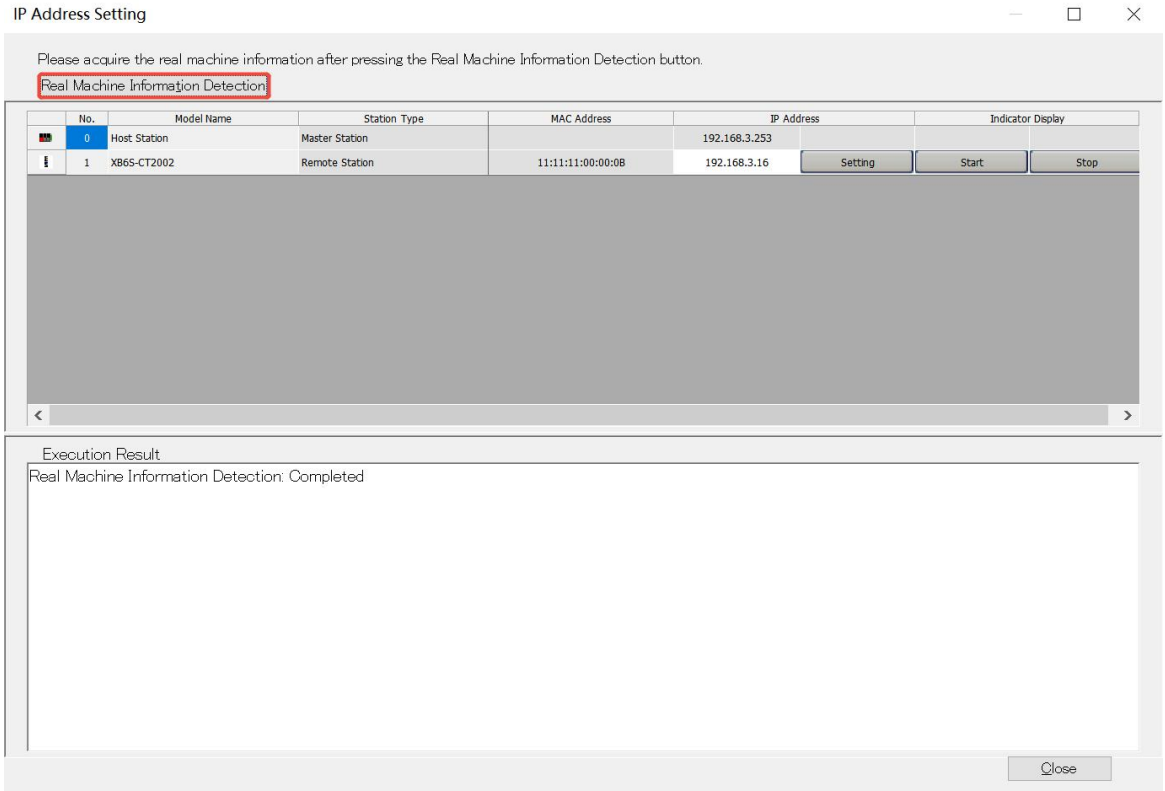

d. Modify the module address in the IP address bar. After the modification is completed, click "Set". The execution result window will prompt "IP address setting for unit 1: Completed" at the bottom, as shown in the following figure.

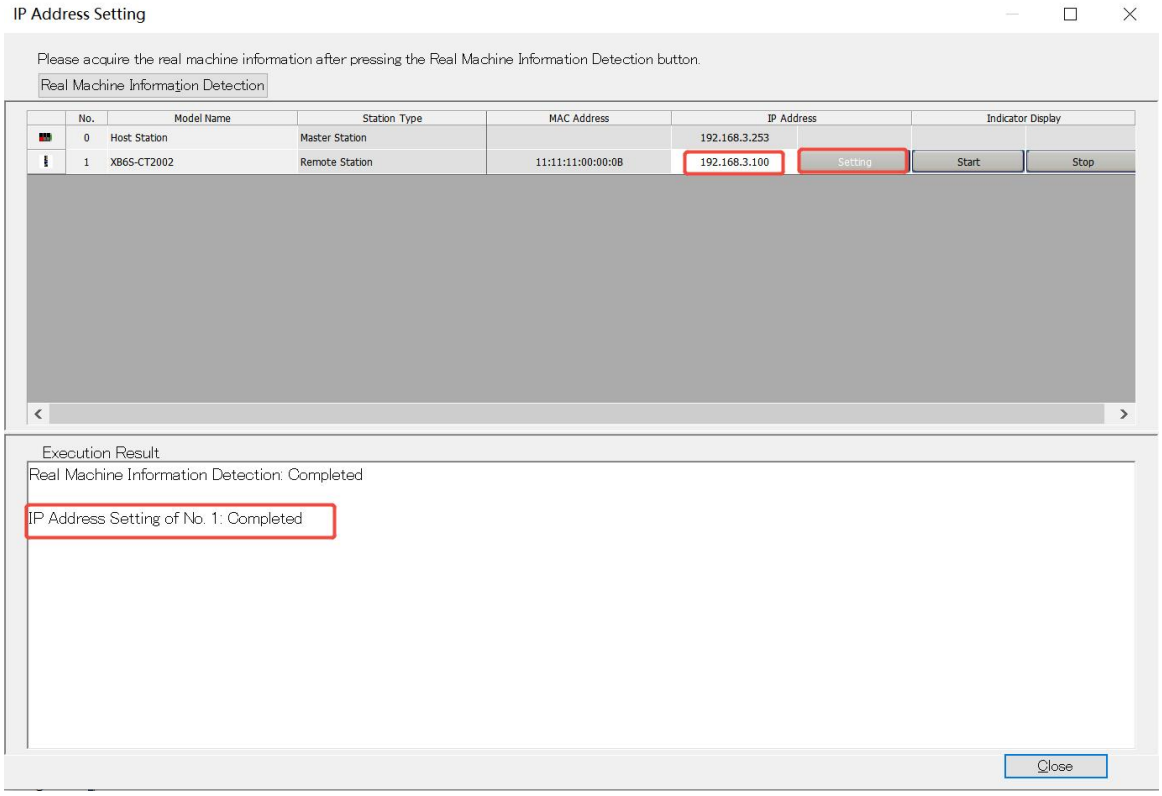

e. Click Close.

f. In the CC-Link IE TSN configuration window, right-click the slave device and select "Delete" to delete the module before modifying the IP address, as shown in the figure below.

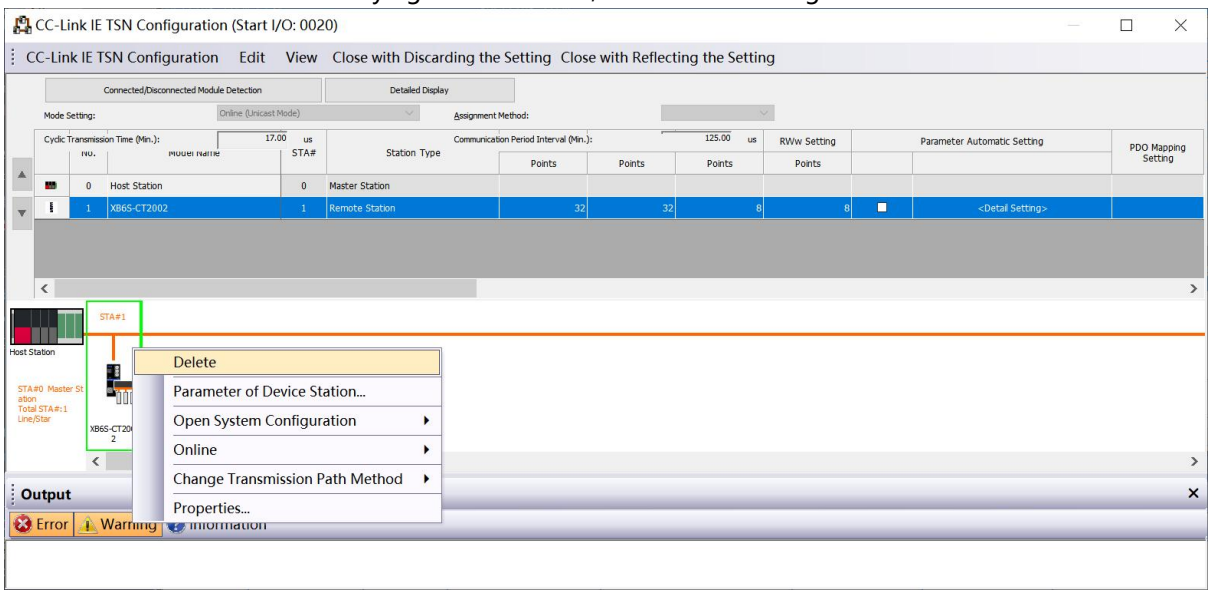

g. Power off the module and then power it back on.

h. Click "Detect connected/disconnected devices" to rescan the devices and add the module with the modified IP address to the network. After the scan is complete, click "Reflect settings and close", as shown in the figure below.

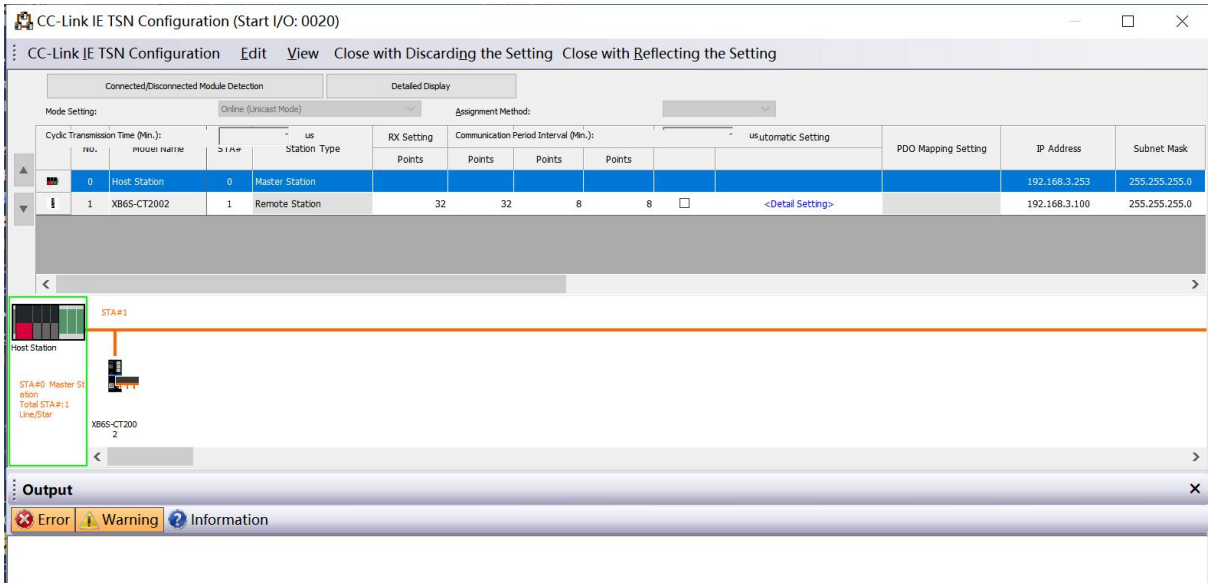

6.2 Parameter Description

6.2.1 Digital input filtering

Digital input filtering prevents the program from responding to unexpected rapid changes in input signals that may be caused by switch contact bounce or electrical noise. Digital input filtering supports single module settings, and each module can be configured separately, not channels.

The digital input filter FilterTime is currently configured by default to 3ms, and the supported setting range is no filtering, 0.1ms, 0.2ms, 0.5ms, 1ms, 2ms, 3ms (factory setting), 4ms...18ms, 19ms, 20ms. When configured to 3ms, clutter within 3ms can be filtered out. The 3ms input filter time means that a single signal can only be detected if it changes from "0" to "1", or from "1" to "0" for 3ms, and a single high pulse or low pulse shorter than 3ms will not be detected.

Function description: When the input filter is configured to 1ms, the clutter within 1ms can be filtered out. As shown in the figure below, when there is a 250us signal input, it will be regarded as an invalid signal, and a single high pulse or low pulse shorter than 1ms will not be detected; signals of 1ms and above can be collected.

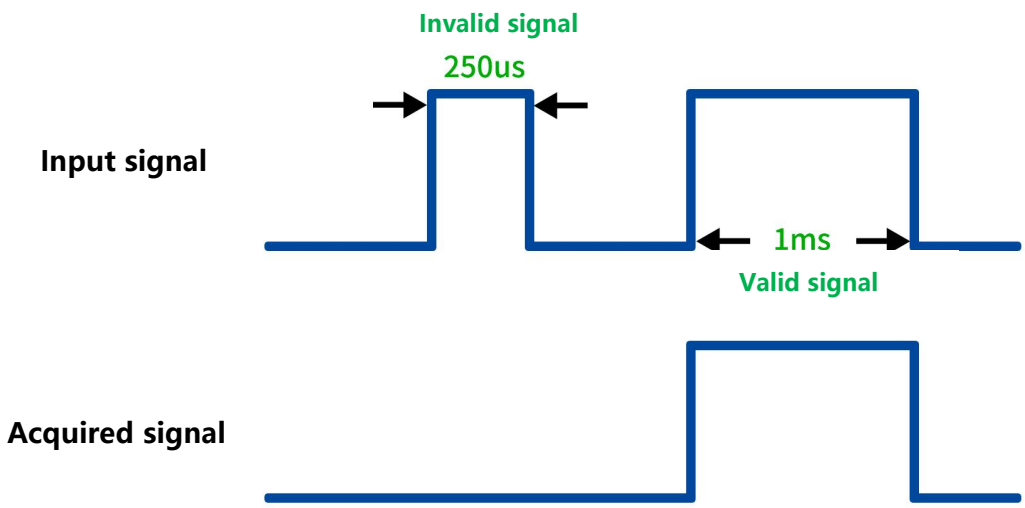

6.2.2 Digital output signal clear/hold

The clear/hold function is for modules with output channels. This function can configure the output mode of the output channel of the module in non-OP state (stop running/coupler network cable disconnected/X-bus offline). This parameter supports the following output states:

Clear output: When the communication is disconnected, the module output channel automatically clears the output, that is, outputs 0.

Output valid value: When the communication is disconnected, the module output channel always outputs the valid value, that is, output 1.

Keep the last output value: When the communication is disconnected, the module output channel keeps the last output value.

The digital clear and hold function supports module overall settings (template mode) and single channel settings (single channel mode). Any channel can be set in single channel mode or template mode. The single channel mode has a higher priority than the template mode. The specific configuration method is shown in the following table. The default is to clear the module output as a whole.

Clear the hold parameters of the digital output module				
Parameter name	Parameter meaning	Parameter Value	Parameter value meaning	default value
TemplateMode	Template Mode	1	PresetLow clears the output, that is, outputs 0	1
		2	PresetHigh outputs a valid value, that is, outputs 1	
		3	KeepMode keeps the last output value	
Channel x	Single channel mode setting	0	TemplateValue template mode value, that is, single-channel mode is not enabled	0
		1	PresetLow clears the output, that is, outputs 0	
		2	PresetHigh outputs a valid value, that is, outputs 1	
		3	KeepMode keeps the last output value	

6.2.3 Analog range setting

Analog range setting Range Select is used to set the analog range. Each channel can be configured separately (see3.3.4 and 3.3.5 Analog Parameters).

6.2.4 Analog input filtering

- **Analog input filter function**

The analog input filter function can average the data after A/D conversion internally to reduce the impact of fluctuations due to noise on the input signal.

The analog input is processed by moving average with the specified number of A/D conversions.

- **Filter function configuration**

Each channel can be configured individually, the configuration range is: 1~200, the default is 10 times.

6.2.5 Analog output signal clear/hold

The clear/hold function is for modules with output channels. This function can configure the output mode of the output channel of the module in non-OP state (stop running/coupler network cable disconnected/X-bus offline). This parameter supports the following output states:

Clear output: When the communication is disconnected, the module output channel automatically clears the output.

Keep output: When the communication is disconnected, the module output channel keeps outputting.

Output preset value: When communication is disconnected, the module output channel outputs the preset value.

The analog clear and hold function supports module overall settings (template mode) and single channel settings (single channel mode). Any channel can be set in single channel mode or template mode. The single channel mode has a higher priority than the template mode. The specific configuration method is shown in the following table. The default is to clear the module output as a whole.

Analog output module clears and holds parameters				
Parameter name	Parameter meaning	Parameter Value	Parameter value meaning	default value
TemplateMode	Template Mode	0	Clear all channels to clear output	0
		1	Hold all channels to hold output	
		2	Preset all channel output preset value	
TemplateValue Chx	Single channel clear/hold configuration	0	TemplateValue template mode value, that is, single-channel mode is not enabled	0
		1	Clear single channel clear output	
		2	Hold single channel hold output	
		3	Preset single channel output preset value	
Preset Value Chx	Single channel presets	Code value range	Current/voltage value corresponding to the output code value (Corresponding range code value table)	0

Note: When the overall setting (template mode) of the module is configured as 2, that is, the preset value of all-channel output takes effect, the preset value is based on the preset code value of channel 0 in the single-channel preset value, and all-channel output is performed.

6.2.6 Analog value power-off preservation

Analog parameters support abnormal power failure and communication disconnection. All module configuration parameters can be saved. Analog modules support power failure saving by default.

6.2.7 Coupler parameters

6.2.7.1 IO communication abnormal configuration function

IO communication exception configuration parameters You can configure the X-bus interaction status when a communication anomaly occurs in an IO module during operation. The parameters can be configured in the following three states:

Exception: No interaction(Default state): When a module is abnormal, X-bus will no longer interact with process data. The original interaction can be restored after the module abnormality disappears.

stop communication: When a module has an abnormality, X-bus stops interacting. Even if the abnormality disappears, the original communication is not restored. The original interaction can only be restored after power is turned on again.

Exception Interaction: When a module is abnormal, the modules after the abnormal module are judged as offline, and the normal modules before the abnormal module can interact with X-bus normally, and X-bus can monitor these modules normally. After the abnormal module recovers, the original interaction can be restored (soft hot swap function).

6.2.7.2 Authentication Class Switching Function

The coupler supports the certification Class switching function, which can be switched to Class A or Class B in the coupler parameter settings according to actual application needs.

Class A: Suitable for basic real-time communication needs, ensuring basic real-time performance and reliability.

Class B: supports more advanced real-time and reliability requirements, suitable for high-speed motion control systems and other complex application scenarios.

This manual uses GX Works3 as an example to introduce the parameter configuration method of the XB6S-CT2002 coupler + I/O module combination. For detailed steps, seeParameter settings in section 6.5.1After the modification is completed, be sure to power on again.

6.3 Fault code information

6.3.1 Coupler common fault code

category	serial number	Error Type	Error Code	Event Name	Event code (2#)	Event code (10#)	Event code (16#)	Treatment
Common Errors	2	Online upgrade error	1	Firmware upgrade exception	0000000010000001	129	0x0081	Try to upgrade again to check whether there is interference in the environment, whether the firmware is too large, etc.
			2	The firmware does not match the current module model	0000000010000010	130	0x0082	Check whether the file is correct, whether there is any abnormality or interference in the module, etc.
	3	Voltage error	5	Load side voltage is not connected	0000000011000101	197	0x00C5	Check whether the power supply on the field side is connected
	6	Channel Error	4	Channel overflow	0000000110000100	388	0x0184	Check whether the input signal of the corresponding channel exceeds the measurement range and whether the output signal exceeds the configurable range
	7	Parameter error	0	Abnormal parameter setting	0000000111000000	448	0x01C0	Check module parameter settings
	63	X-bus communication error	1	X-bus initialization failed	0000111111000001	4033	0x0FC1	Check whether the module connection is normal
			2	X-bus token timeout	0000111111000010	4034	0x0FC2	Check whether the module has any abnormality or interference.

			3	X-bus module is offline	0000111111000011	4035	0x0FC3	Check whether the module is online or has interference, etc.
			4	Parsing data CRC error	0000111111000100	4036	0x0FC4	Check whether the module has any abnormality or interference.
			5	X-bus module does not support abnormal interaction function	0000111111000101	4037	0x0FC5	Upgrade the module software version or do not use abnormal interactive functions
Analog	1	XB6S-A 80TM	0	Disconnection	0010000001000000	8256	0x2040	Check whether the corresponding channel wiring is normal
Gateway	0	XB6S-C01SP	0	General parameter error	0101000000000000	20480	0x5000	Check whether the common parameters exceed the parameter limit
			1	Communication node parameter error	0101000000000001	20481	0x5001	Check whether the communication node format and node settings are consistent with the communication mode and control mode.
			2	Process data error	0101000000000010	20482	0x5002	When the parameter configuration is complete and there are no other alarms, power off and then power on again to rescan the module.
			3	Modbus Register Map Conflict	0101000000000011	20483	0x5003	Compare the start address and length settings of each Modbus write instruction of

								communication node parameter 1 to see if there is any overlap in the range
			4	Modbus node ID setting error	0101000000000100	20484	0x5004	Check whether the slave ID range of communication node parameter 2 is between 1 and 247.

6.3.2 Fault code check

Take IO Config Tool software as an example. In debug mode, click "Alarm Information" to view the alarm information in the alarm information window. As shown in the figure below, the alarm code is Hex: 00c5, which means voltage error. The load side voltage is not connected. You can check whether the field side power supply is connected.

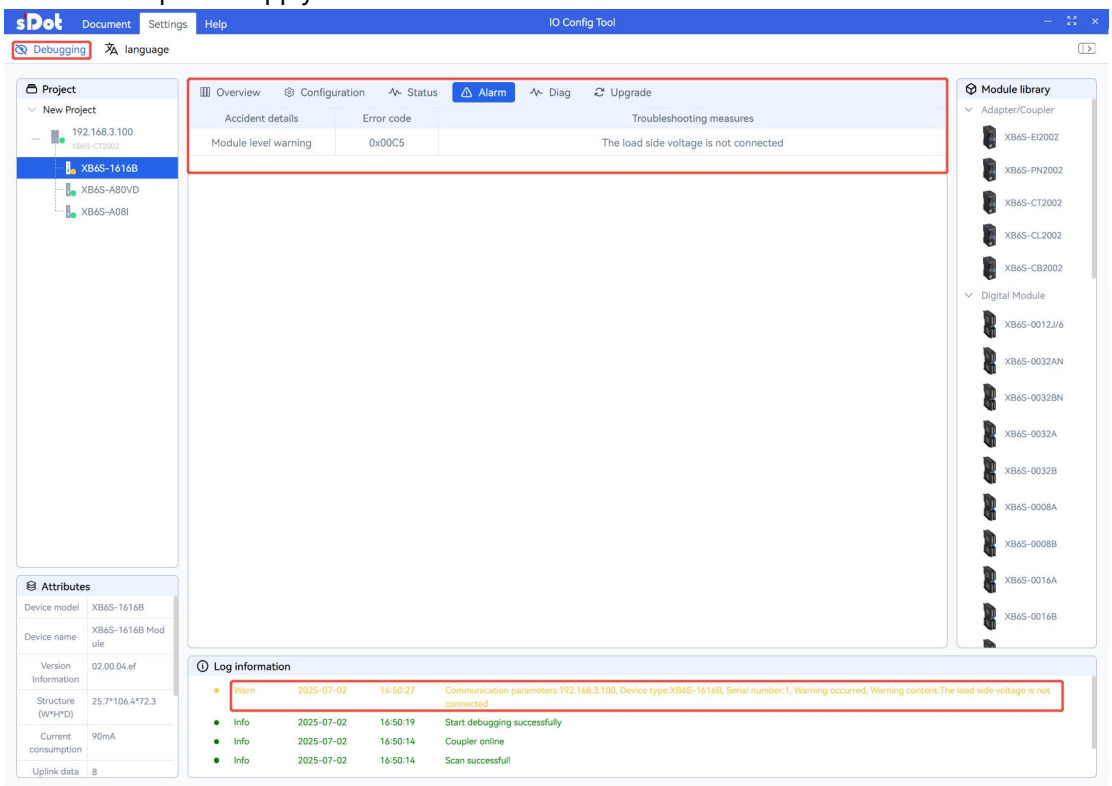

Note: The fault code information must be viewed in debug mode.

6.4 Soft component description

6.4.1 Coupler software

The coupler soft element allocation is as follows:

Station Type	Software	illustrate
Remote Station	RX	0~1024 bits For digital input process data
	RY	0~1024 bits For digital output of process data
	R	0~256 words For analog input process data
	R	0~256 words For analog output of process data

6.4.2 IO module channels and soft components

IO module data allocation instructions

Digital IO module:

Each channel of the module occupies 1 bit, and the actual data length used varies depending on the number of module channels.

Analog IO module:

Each channel of the module occupies 2 bytes. The actual data length used varies depending on the number of module channels.

The data length is allocated as follows:

Module Model	Uplink process data length (Byte)		Downlink process data length (Byte)	
	Assigning Values	Actual usage value	Assigning Values	Actual usage value
XB6S-3200(N)	4	4	-	-
XB6S-1600	2	2	-	-
XB6S-0800	1	1	-	-
XB6S-1616A/B	2	2	2	2
XB6S-0032A/B(N)	-	-	4	4
XB6S-0016A/B	-	-	2	2
XB6S-0008A/B	-	-	1	1
XB6S-0012J/6	-	-	2	2
XB6S-A80VD	16	16	-	-
XB6S-A80V	16	16	-	-
XB6S-A40VD	8	8	-	-
XB6S-A40V	8	8	-	-
XB6S-A80ID	16	16	-	-
XB6S-A80I	16	16	-	-
XB6S-A40ID	8	8	-	-
XB6S-A40I	8	8	-	-
XB6S-A80	16	16	-	-
XB6S-A40	8	8	-	-
XB6S-A08V	-	-	16	16
XB6S-A04V	-	-	8	8
XB6S-A08I	-	-	16	16
XB6S-A04I	-	-	8	8
XB6S-A08	-	-	16	16
XB6S-A04	-	-	8	8
XB6S-A80TM	16	16	-	-
XB6S-A40TM	8	8	-	-
XB6S-PL20	34	34	20	20
XB6S-PS20D	26	26	2	2
XB6S-PL20D	34	34	20	20

XB6S-PC80	64	64	2	2
XB6S-PT04A	48	48	56	56
XB6S-C01SP-32Bytes	32	32	32	32
XB6S-C01SP-64Bytes	64	64	64	64
XB6S-C01SP-128Bytes	128	128	128	128
XB6S-C01SP-255Bytes	255	255	255	255

IO module channel and soft element correspondence table

XB6S-3200(N)		
Signal transmission direction: input module -> master station		
Software No.	Corresponding input channel	Input signal
DIa Digital input		
RX0~RXF	Channel 0~F	Input signal X0~XF
DIb Digital input		
RX10~RX1F	Channel 0~F	Input signal X10~X1F
XB6S-1600		
Signal transmission direction: input module -> master station		
Software No.	Corresponding input channel	Input signal
DI Digital input		
RX0~RXF	Channel 0~F	Input signal X0~XF
XB6S-0800		
Signal transmission direction: input module -> master station		
Software No.	Corresponding input channel	Input signal
DI Digital input		
RX0~RX7	Channel 0~7	Input signal X0~X7
XB6S-1616A/B		
Signal transmission direction: Master station->Input and output module->Master station		
Software No.	Corresponding output channel	Input and output signals
DI Digital input		
RX0~RXF	Channel 0~F	Input signal X0~XF
RX10~RX1F	none	Prohibited Use
DO digital output		
RY0~RYF	Channel 0~F	Output signal Y0~YF
RY10~RY1F	none	Prohibited Use
XB6S-0032A/B(N)		
Signal transmission direction: Master station -> output module		
Software No.	Corresponding output channel	Output signal
DOa Digital output		
RY0~RYF	Channel 0~F	Output signal Y0~YF
DOb Digital output		
RY10~RY1F	Channel 0~F	Output signal Y10~Y1F
XB6S-0016A/B		
Signal transmission direction: Master station -> output module		
Software No.	Corresponding output channel	Output signal
DO digital output		
RY0~RYF	Channel 0~F	Output signal Y0~YF

XB6S-0008A/B		
Signal transmission direction: Master station -> output module		
Software No.	Corresponding output channel	Output signal
DO digital output		
RY0~RY7	Channel 0~7	Output signal Y0~Y7
XB6S-0012J		
Signal transmission direction: Master station -> output module		
Software No.	Corresponding output channel	Output signal
RY0~RYB	0~B	Output signal Y0~YB
XB6S-A80VD/XB6S-A80V/XB6S-A80ID/XB6S-A80I/XB6S-A80/XB6S-A80TM		
Signal transmission direction: Input module -> Master station		
Software No.	Corresponding input channel	Input signal
AI analog input		
RWr0~7	Channel 0~7	Input signal D0~D7
XB6S-A40VD/XB6S-A40V/XB6S-A40ID/XB6S-A40I/XB6S-A40/XB6S-A40TM		
Signal transmission direction: Input module -> Master station		
Software No.	Corresponding input channel	Input signal
AI analog input		
RWr0~3	Channel 0~3	Input signal D0~D3
XB6S-A08V/XB6S-A08I/XB6S-A08		
Signal transmission direction: master station -> output module		
Software No.	Corresponding output channel	Output signal
AO analog output		
RWw0~7	Channel 0~7	Output signal D0~D7
XB6S-A04V/XB6S-A04I/XB6S-A04		
Signal transmission direction: master station -> output module		
Software No.	Corresponding output channel	Output signal
AO analog output		
RWw0~3	Channel 0~3	Output signal D0~D3

6.5 CC-Link IE TSN Coupler Configuration Application

6.5.1 Application in GX Works3 software environment

1、Preparation

- **Hardware Environment**
  - **Module preparation. This description takes the XB6S-CT2002+XB6S-1616B+XB6S-A80VD+XB6S-A08I topology as an example.**
  - **A computer with GX Works3 pre-installed**
  - **Mitsubishi PLC**

    This description takes model R04ENCPU and master station RJ71GN11-T2 as an example
  - **Special shielded cable**
  - **Switching power supply**
  - **Device Profile**

    Configuration file acquisition address:https://www.solidotech.com/en/resources/configuration-files
- **Hardware configuration and wiring**

  Please follow the4 Installation and removal"and"5 WiringRequest action

- **Computer IP requirements**

  Set the IP address of the computer Ethernet port and the IP address of the PLC to ensure that they are in the same network segment.

2、Install CSP File

a. Open GX Work3 software, click "Tool" in the menu bar, and click "Profile Management -> Register", as shown in the figure below.

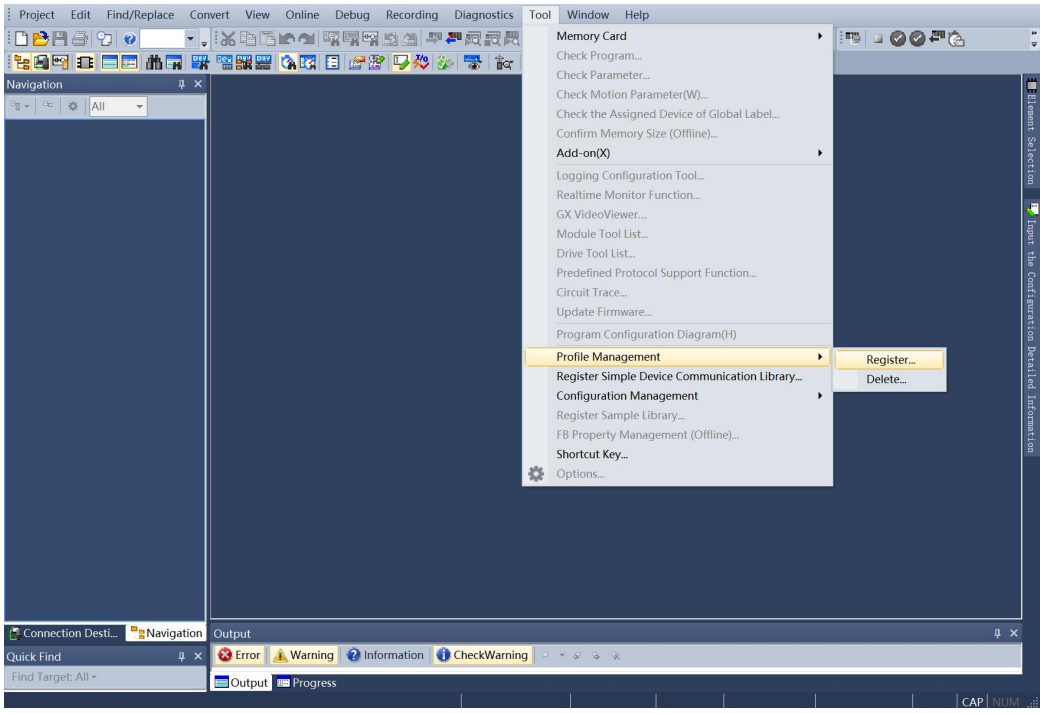

b. In the pop-up box, select the CSP file to be added and click "Register" to complete the installation, as shown in the figure below.

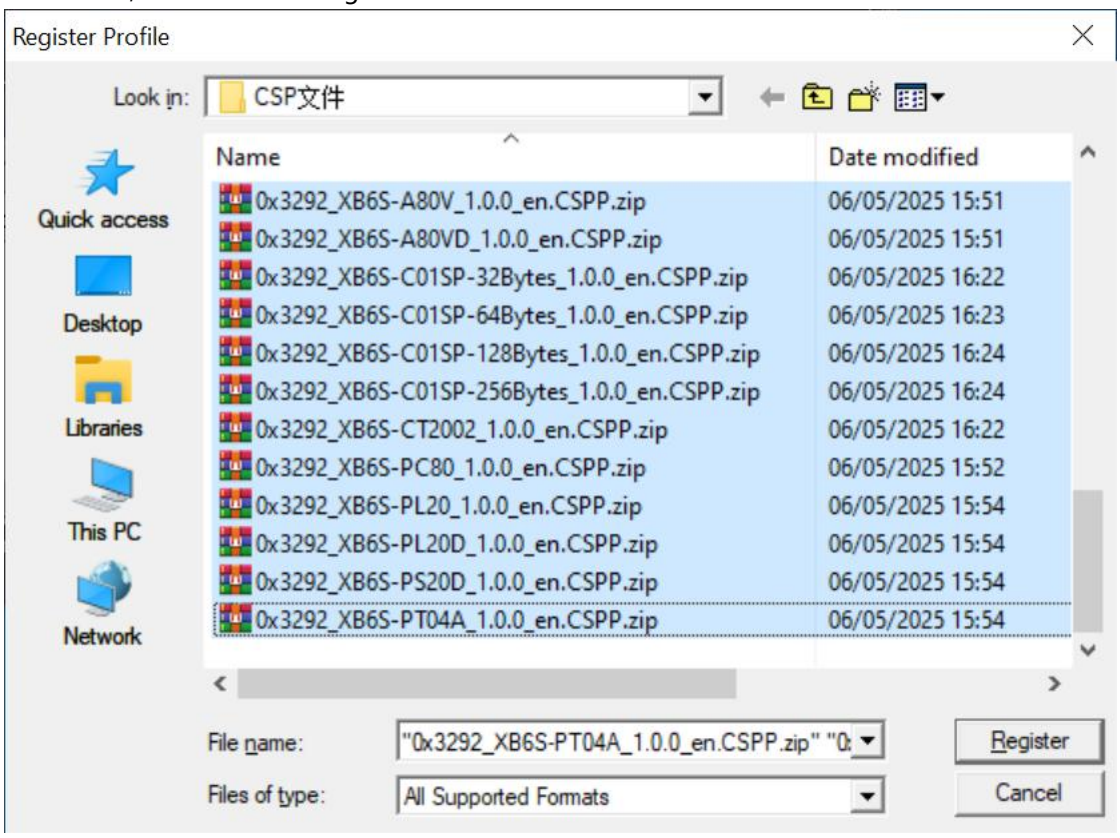

Note: The configuration file does not need to be decompressed, and the project needs to be closed during installation; if the configuration file needs to be replaced, be sure to uninstall it before adding it.

3、Create a project

a. Click "Project" in the menu bar, and then click "New Project".

b. The New Project dialog box pops up. Select "RCPU" for PLC series, "R04EN" for PLC type, and ladder diagram as the default programming language.

c. Click “OK”, as shown in the following figure.

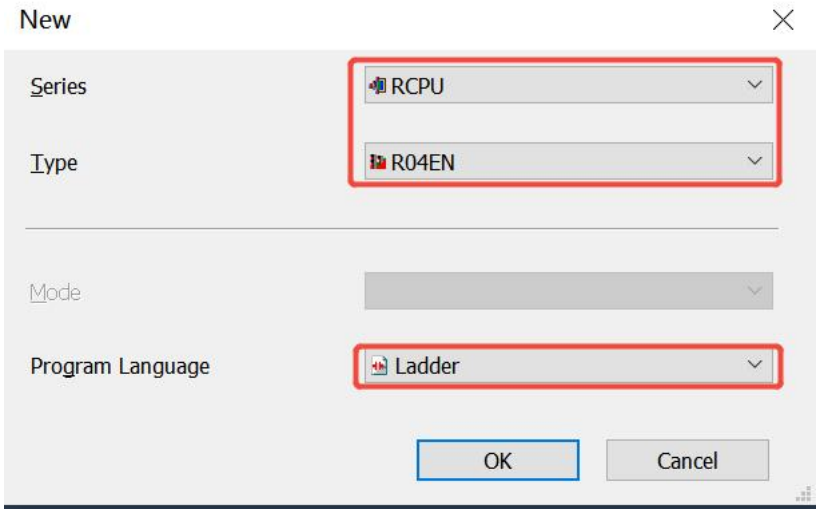

d. Double-click "Module Configuration" in the left navigation tree. A prompt box will pop up. Click "OK" to enter the module configuration diagram interface, as shown in the following figure.

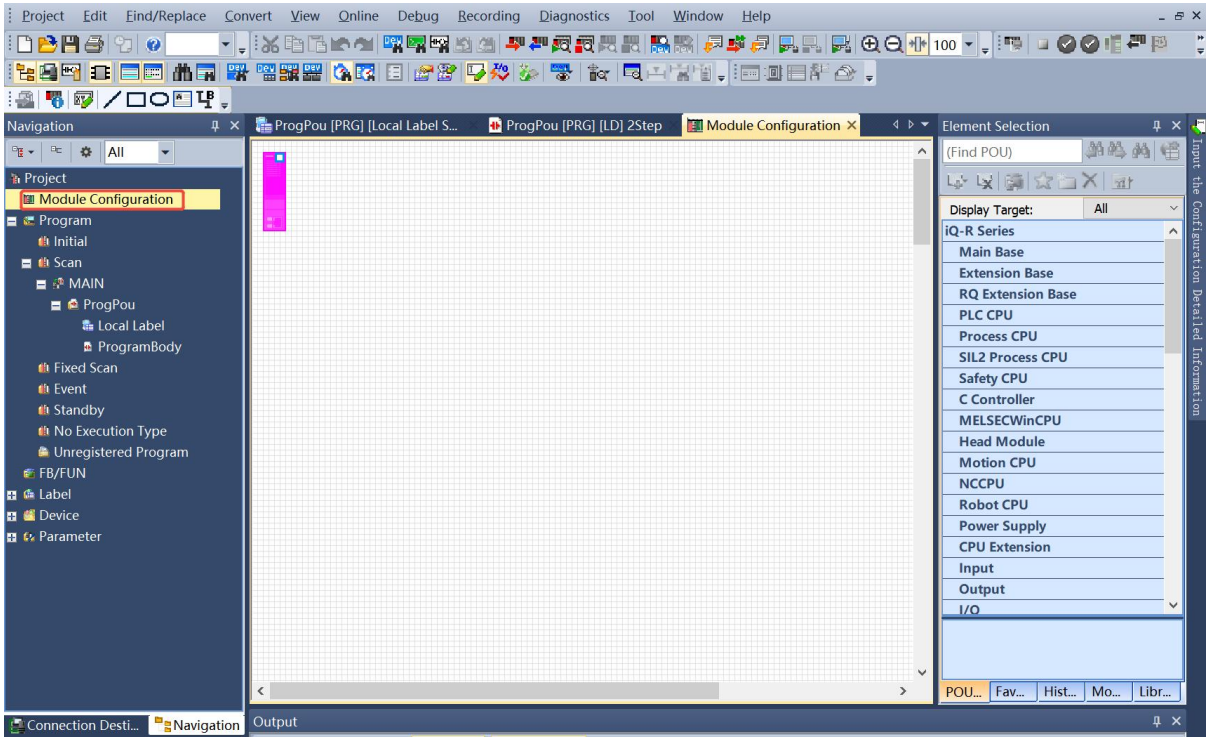

e. Search for the main base module "R35B" in the search box of "Element Selection" on the right, and drag "R35B" to the "Module Configuration", as shown in the figure below.

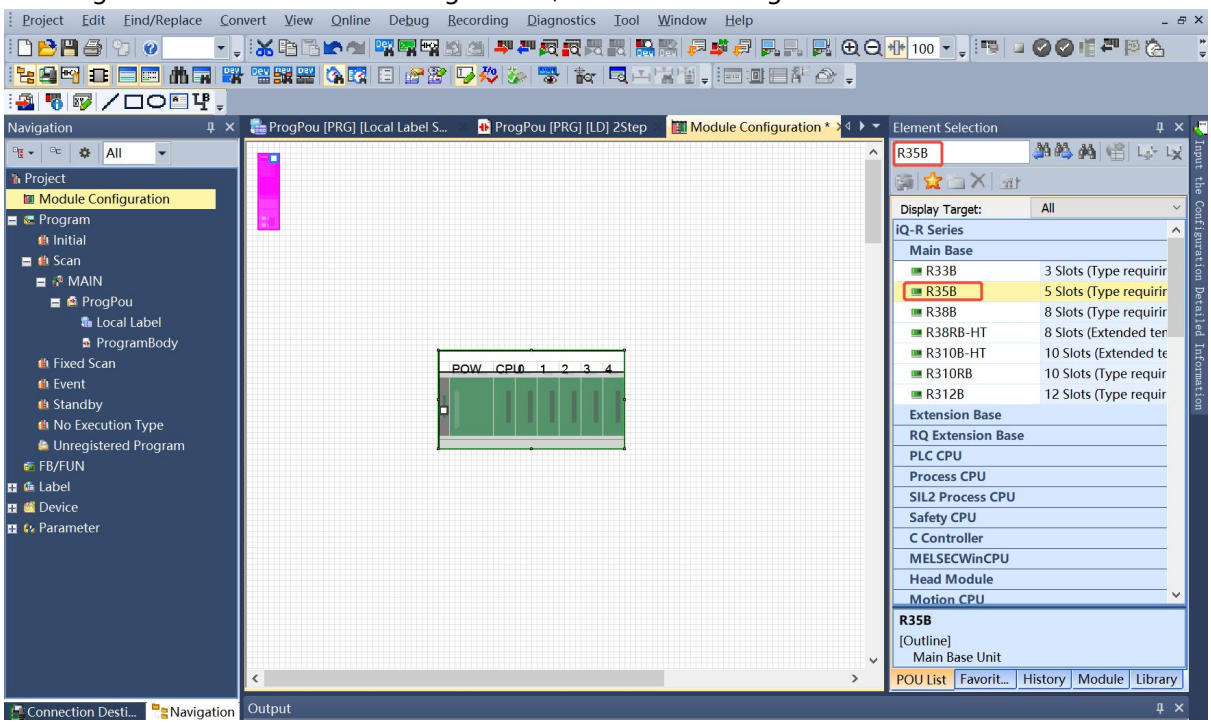

f. In the search box of "Element Selection" on the right, search for the power module R61P and drag R61P to the slot POW of the main base module, as shown in the following figure.

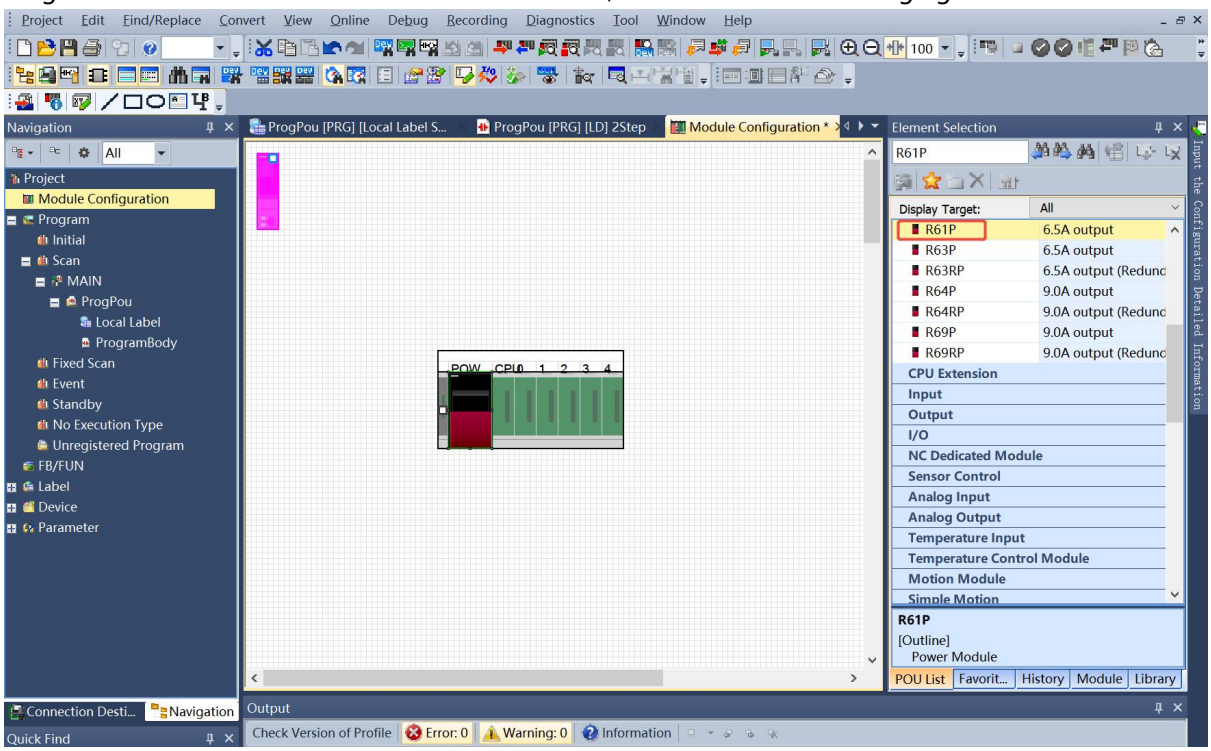

g. Drag the CPU module "R04ENCPU" to the slot CPU of the main base module, as shown in the figure below.

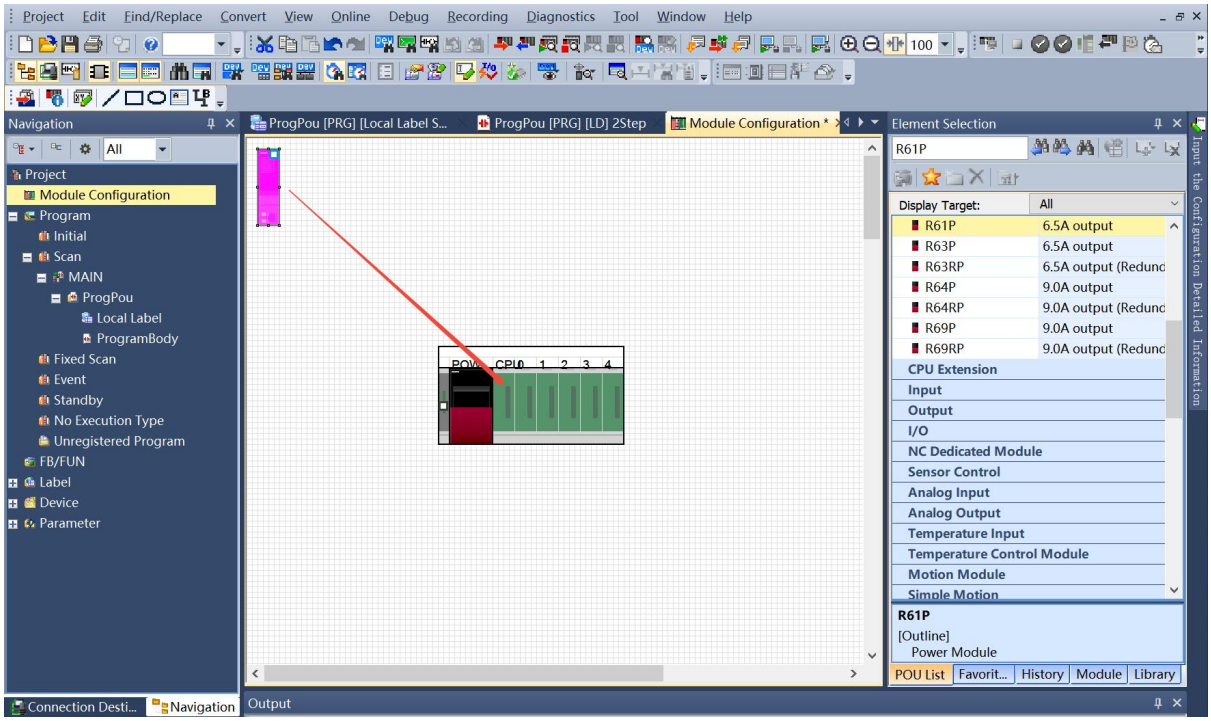

h. In the search box of "Element Selection" on the right, search for Ethernet interface module "RJ71EN71 (CCIEF)" and CC-Link IE TSN module "RJ71GN11-T2" in turn, and drag them to slot 0 and slot 1 of the main base module respectively, as shown in the following figure.

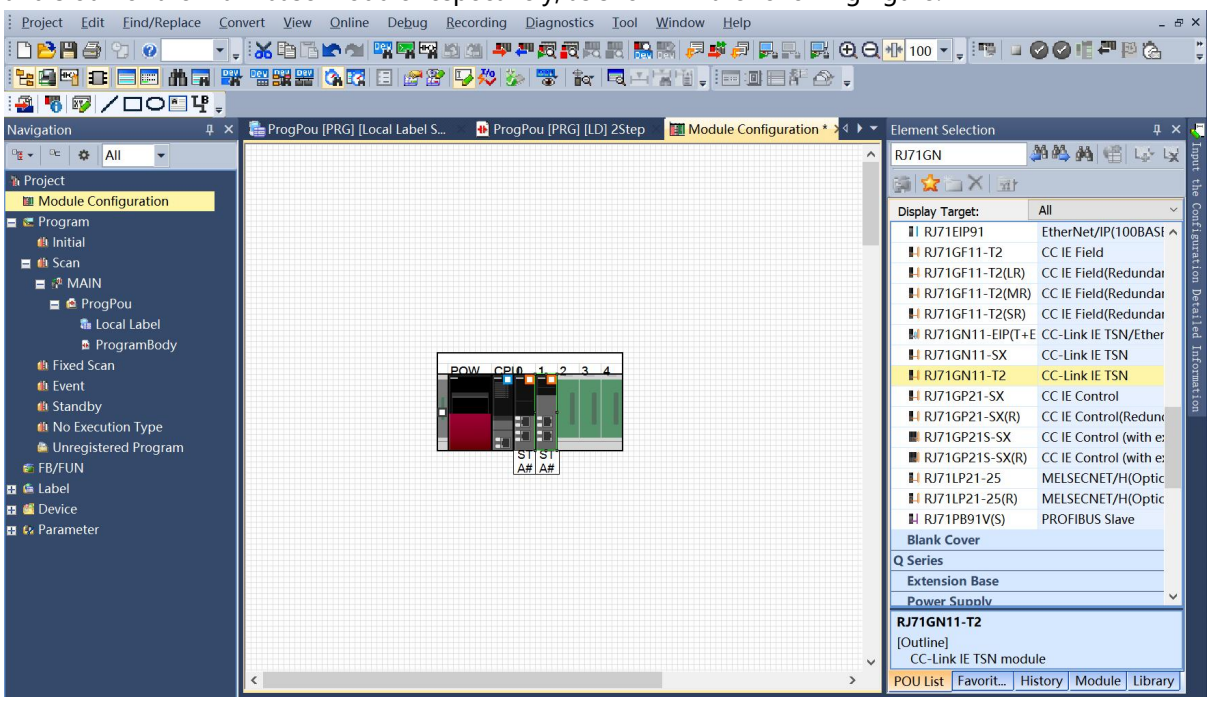

i. Double-click the CC-Link IE TSN module "RJ71GN11-T2", and a prompt box will pop up "Fix parameters before displaying the parameter setting window. Are you sure you want to continue?" Click "Yes", as shown in the following figure.

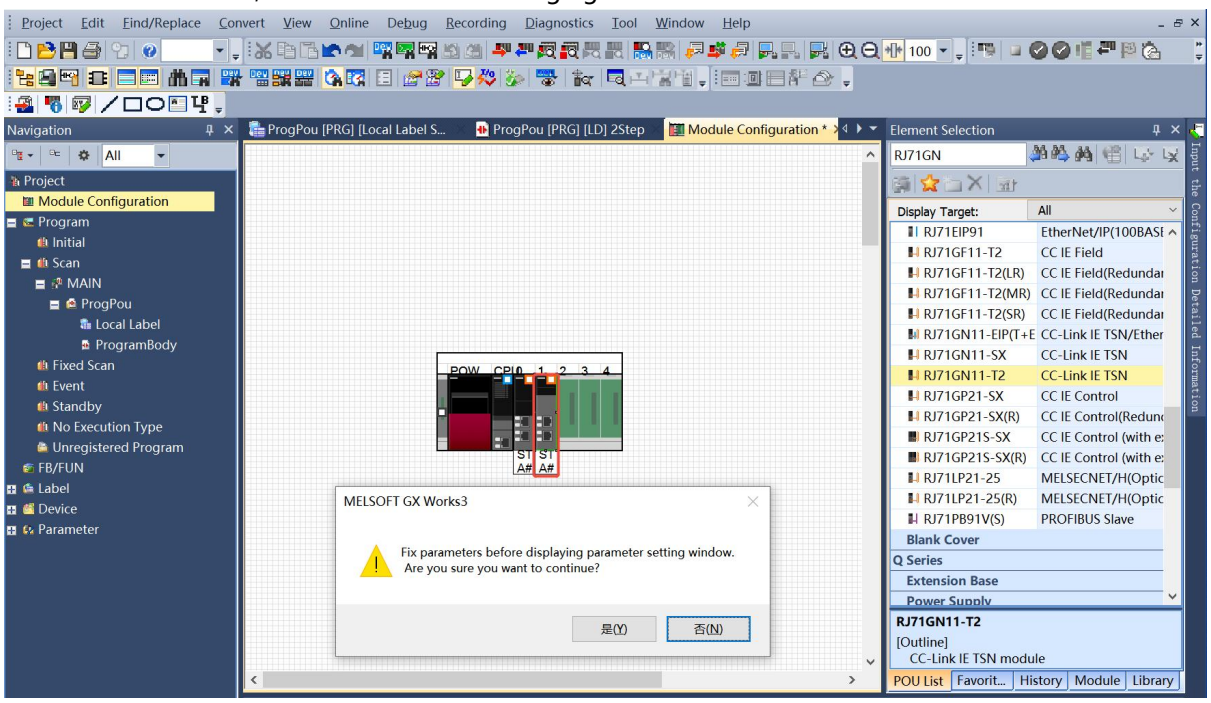

j. The following prompt box pops up: "When the management CPU uses the CC-Link IE TSN module of this machine, it is necessary to set the direct link device setting of the CPU parameters to [Extended mode (iQ-R series mode)]. Do you want to change the setting?" Click "Yes".

k. The following prompt box pops up: Add module RJ71EN71 (CCIEF). Click OK.
l. A dialog box "Add module RJ71GN11-T2" is displayed. Click OK.

4、Setting up using CC-Link IE Field Network Basic

a. In the left navigation interface, select "Parameters -> Module Information", double-click "0000:_RJ71EN71 (CCIEF)", set the network number to "2" under the network number setting item, and click "Apply", as shown in the figure below.

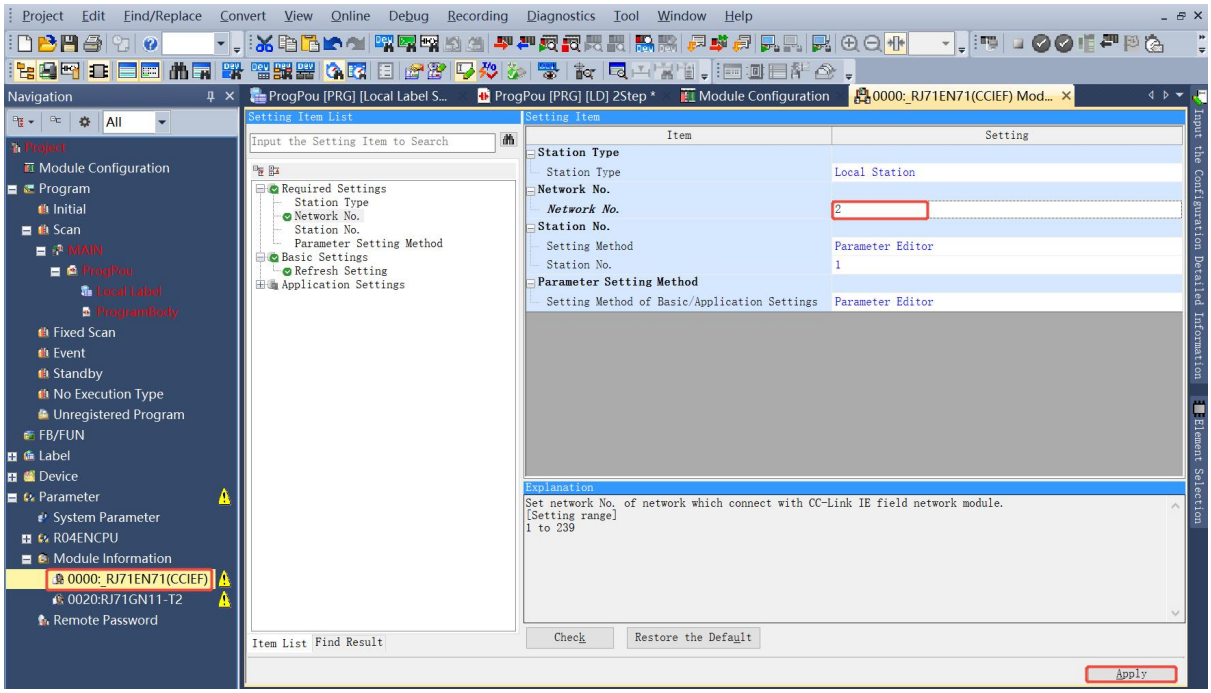

b. Double-click "0020: RJ71GN11-T2", set the station type to "Master Station" under the Station Type Setting item, set the subnet mask under the IP Address Setting, and click "Apply", as shown in the figure below.

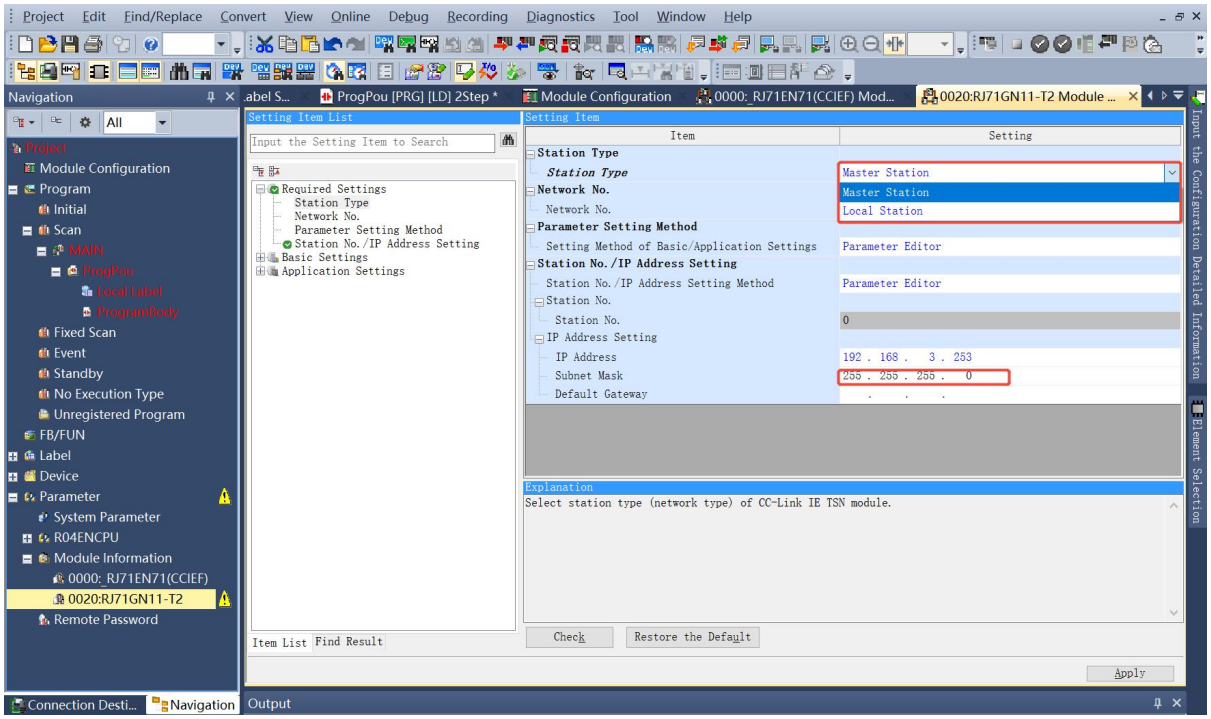

c. Click "Basic Settings" in the project navigation tree, select "Network Configuration Settings", double-click "Detailed Setting" to enter the "CC-Link IE TSN Configuration" interface, as shown in the figure below.

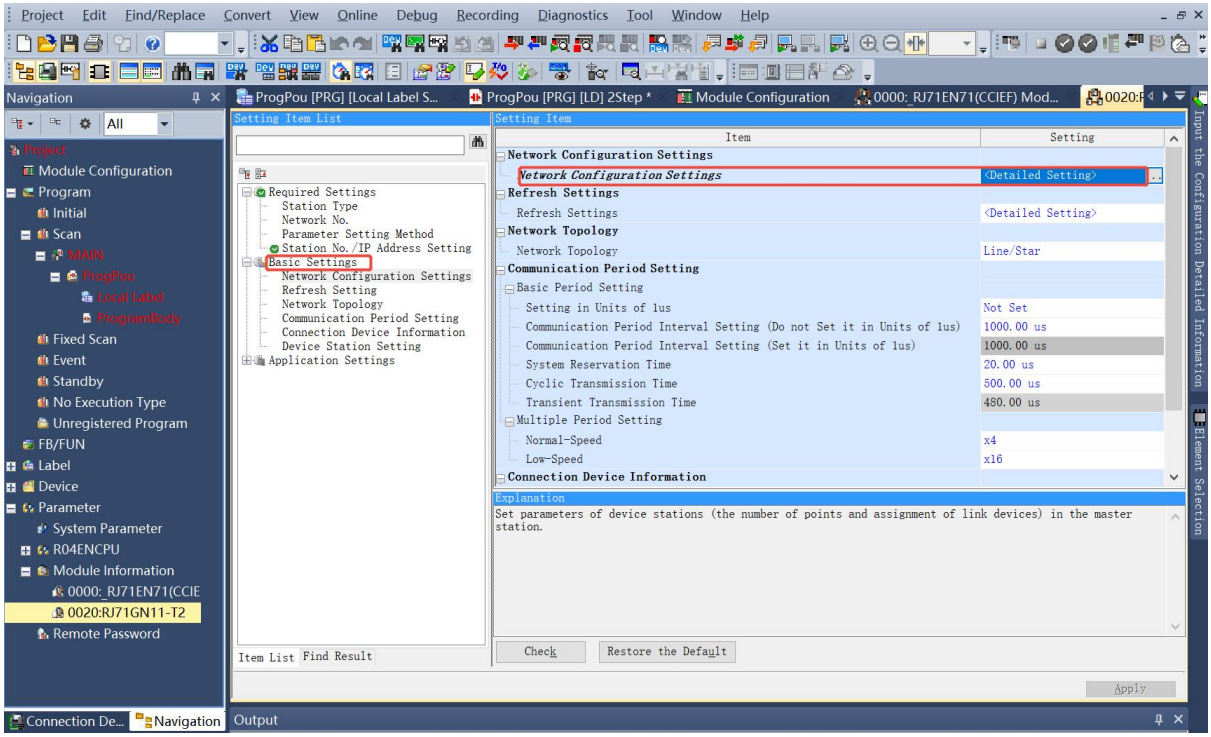

5、Adding a Slave

a. In the CC-Link IE TSN configuration window, click "Connected/disconnected module detection" to automatically add connected modules to the network. After adding, click "Reflect settings and close", as shown in the figure below.

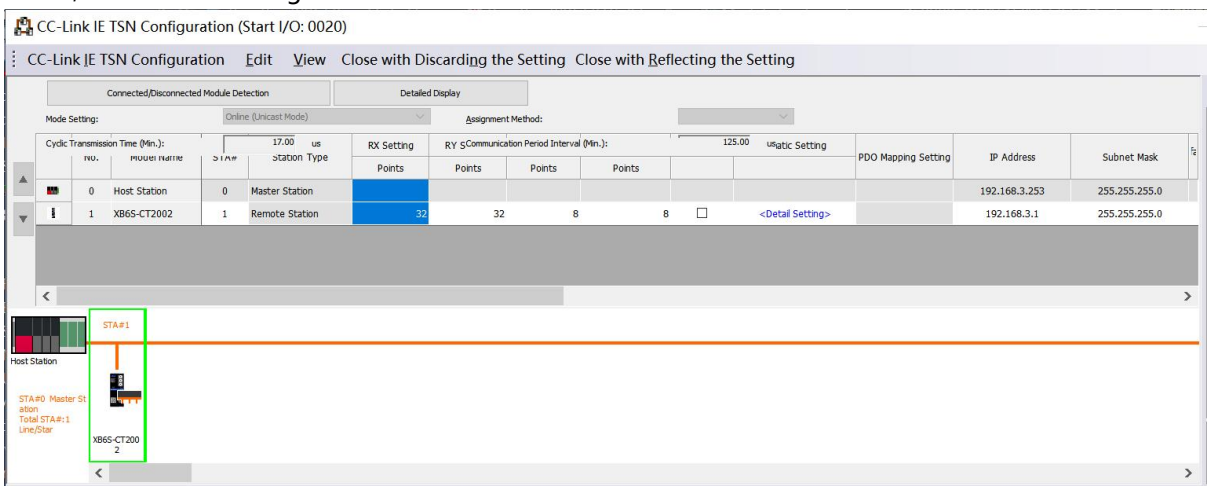

6、Refresh Settings

a. In the left navigation interface, select "Parameters -> Module Information", double-click "0020: RJ71GN11-T2" to enter the setting project interface, select "Refresh Settings", and double-click "Detailed Settings", as shown in the figure below.

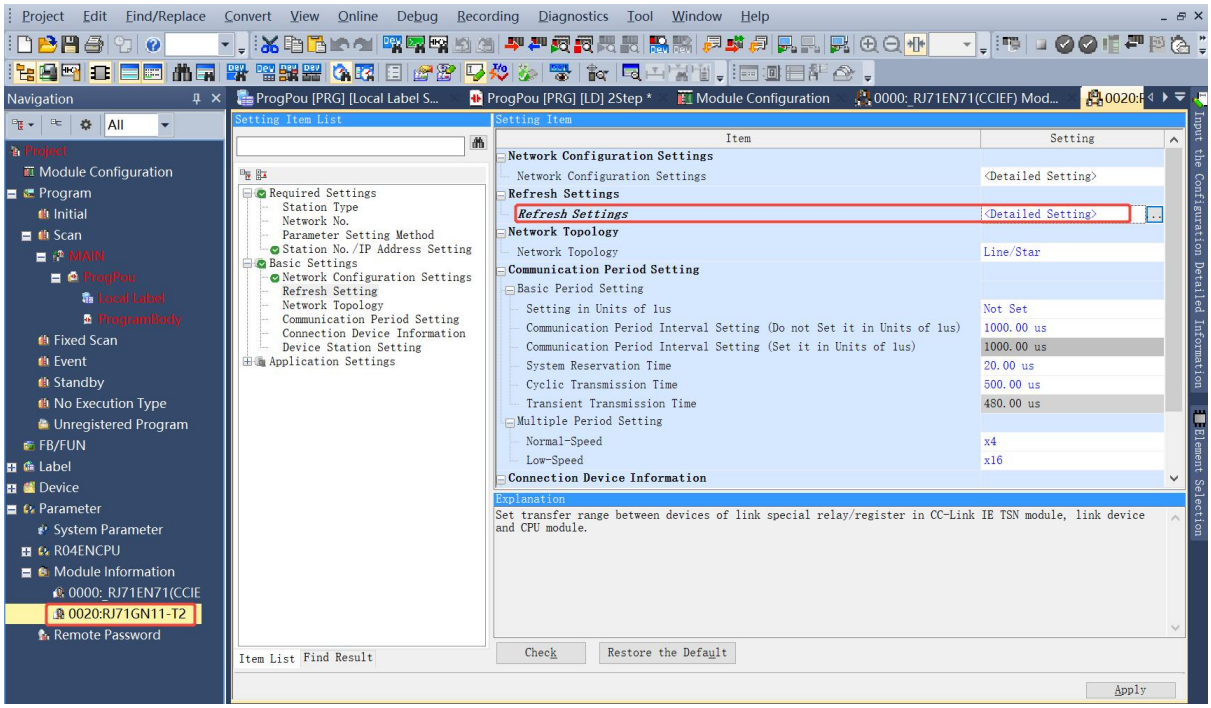

b. Configure related parameters. After completing the configuration, click "Apply", as shown in the following figure.

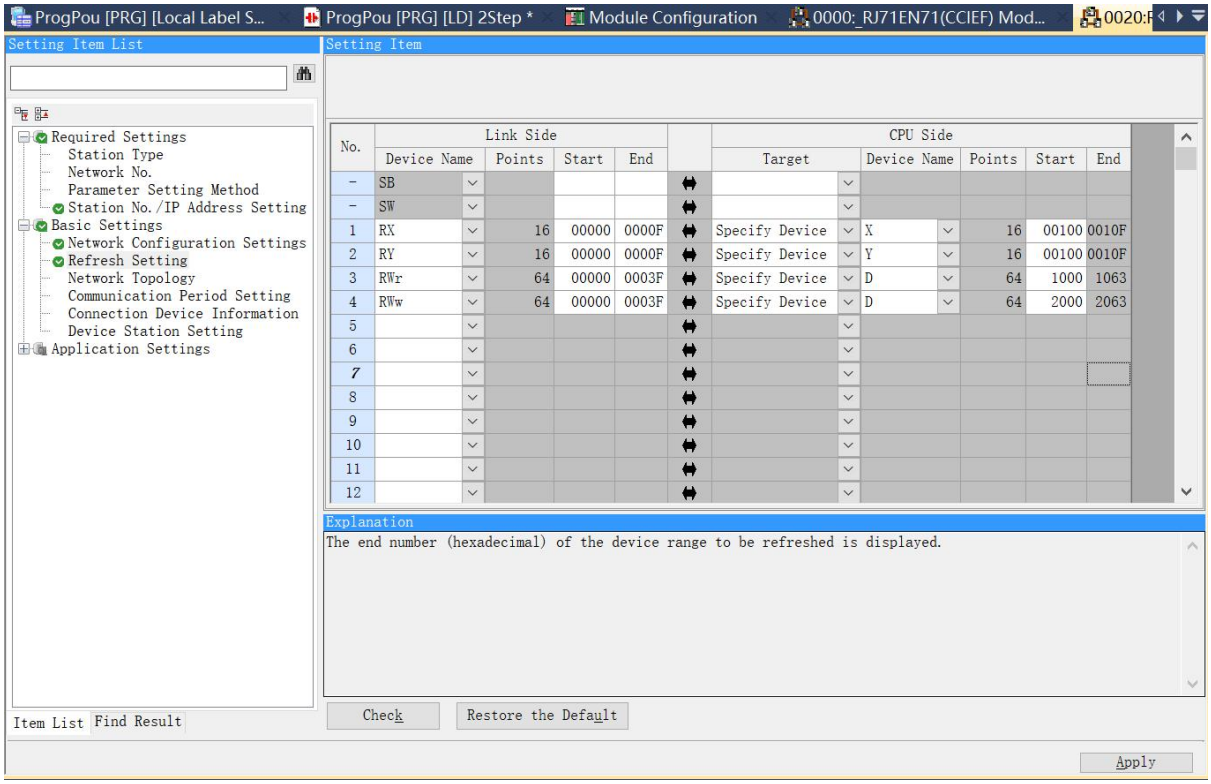

7、Download Configuration Parameters

a. Click "Apply" in the "RJ71GN11-T2" project setting interface, and then click "Convert -> Rebuild All" in the menu bar, as shown in the following figure.

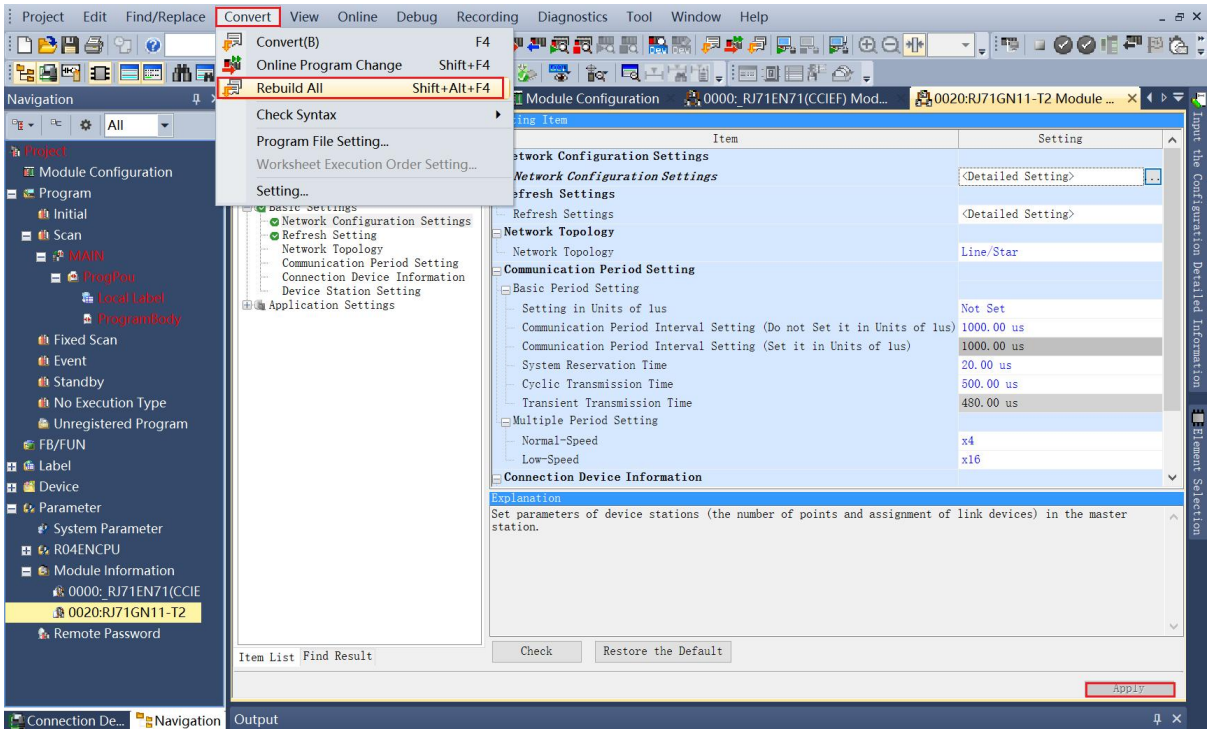

b. Click "Online" in the menu bar, click "Write to PLC", and write the set parameters to the CPU module of the master station, as shown in the figure below.

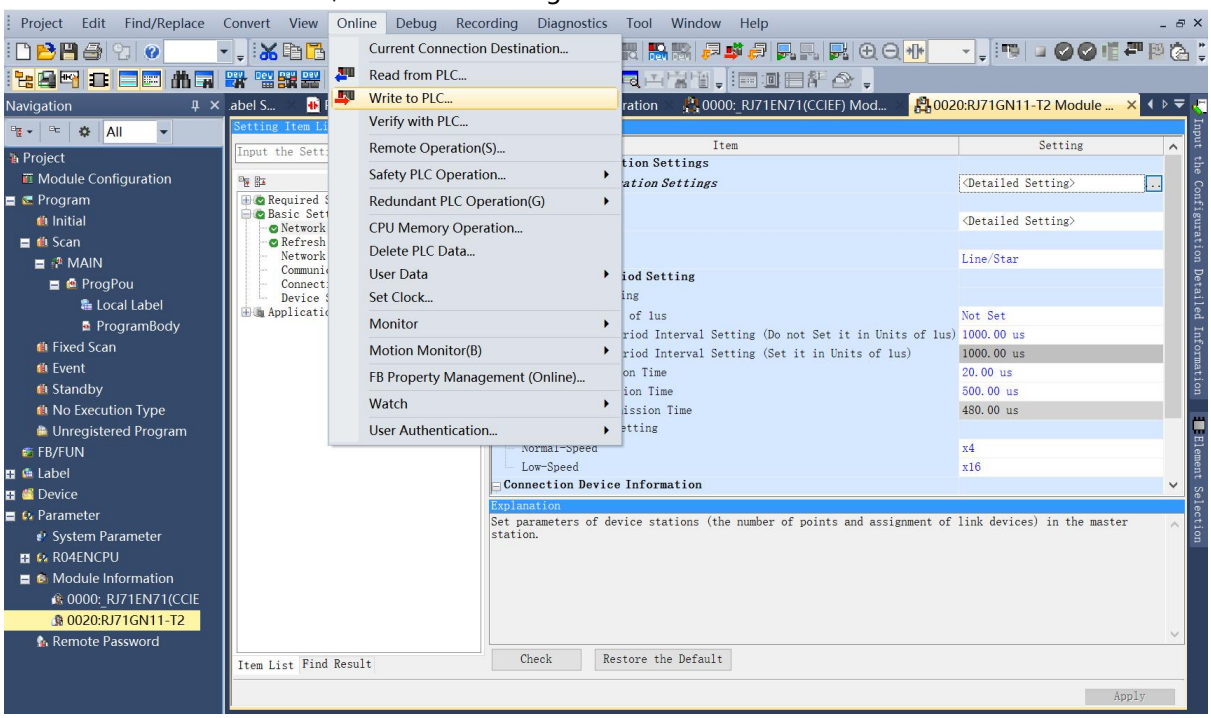

c. The "Online Data Operation" dialog box pops up, select "Select All", as shown in the figure below.

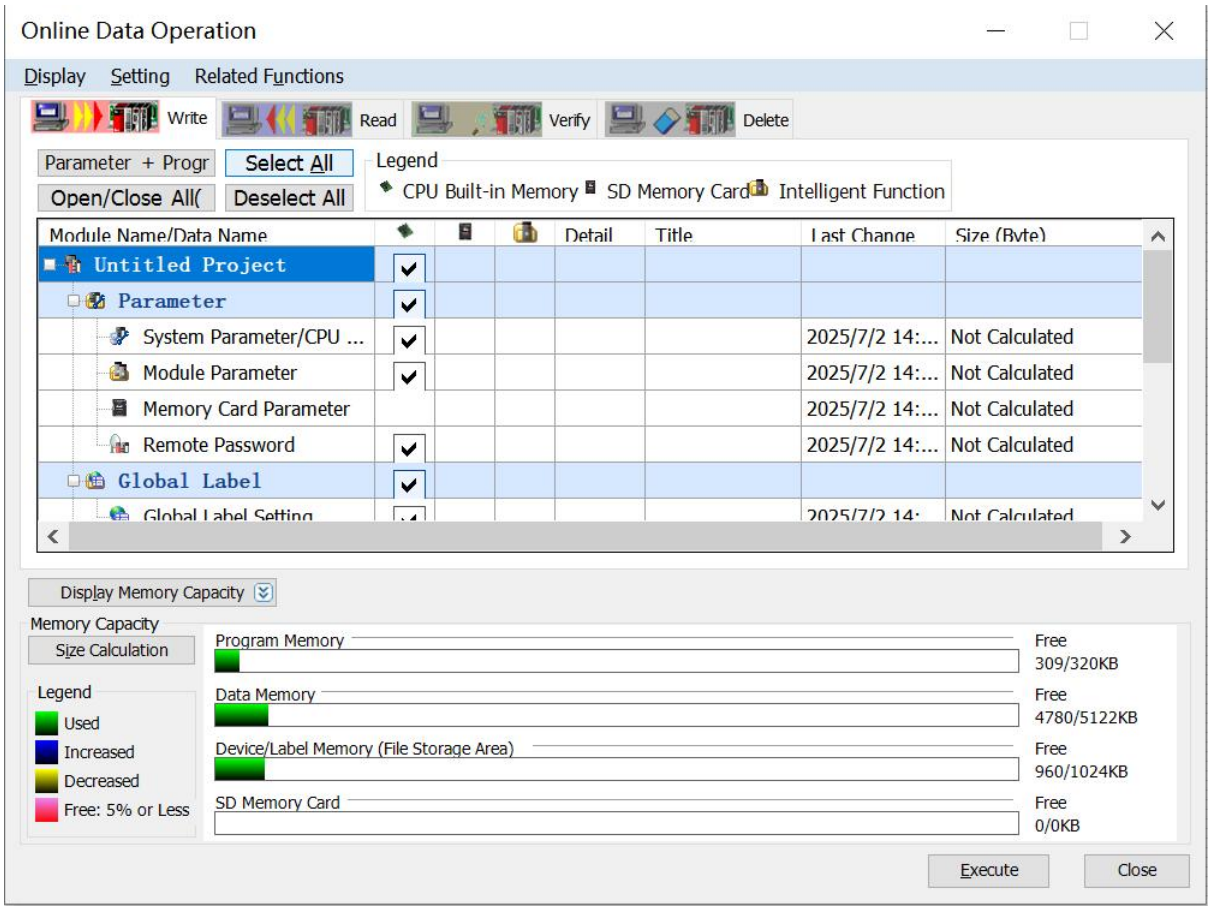

d. Click “Execute”.

e. A prompt box pops up asking "Do you want to write to PLC after executing remote STOP?" Select "Yes".

f. A lower-level prompt box pops up: "Parameters already exist, do you want to overwrite?" Select "Yes to All".

g. A lower-level prompt box pops up: "There is no data in the soft component comment (COMMENT). No data is written." Click "OK".

h. A prompt box pops up saying "CPU is in STOP state. Do you want to execute remote RUN?" Select "Yes".

i. A dialog box pops up saying "Completed". Click OK.

j. The download and parameter setting operation is now complete. Click Close.

k. Disconnect power from the module and PLC and then power them back on.

8、Communication diagnostics

a. Click Diagnosis in the menu bar and click “CC-Link IE TSN/CC-Link IE Field Diagnosis”, as shown in the following figure.

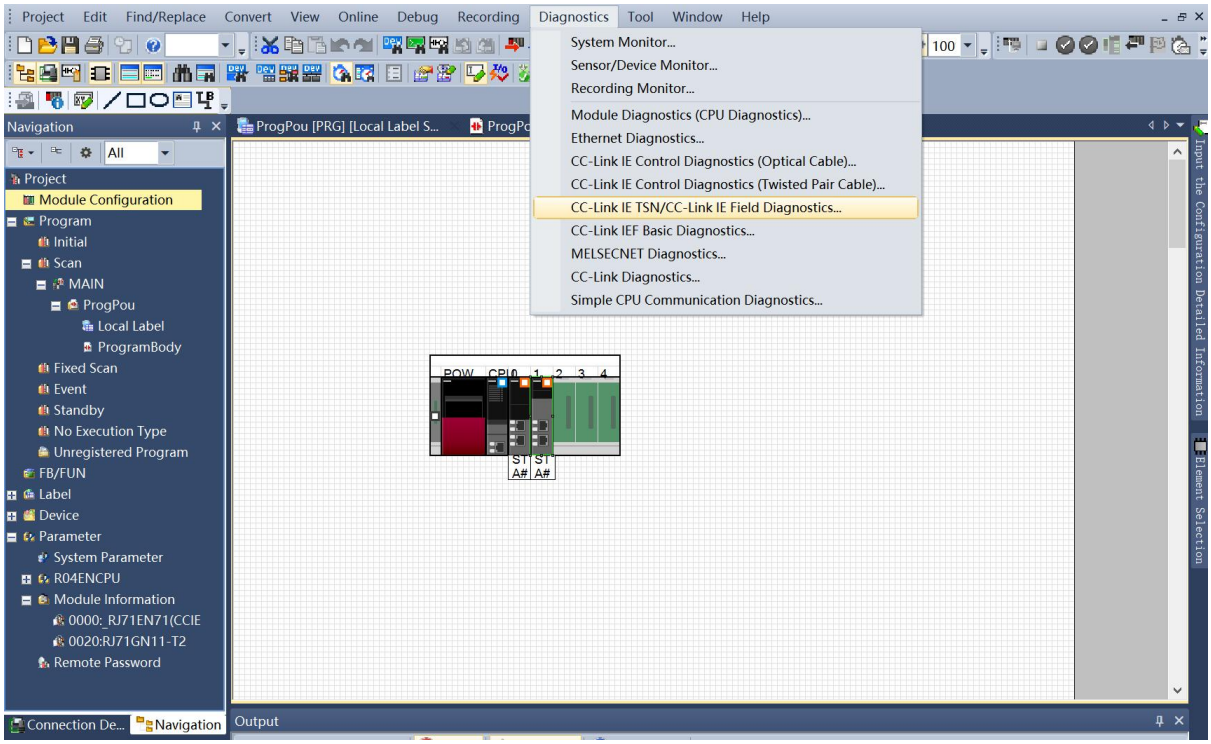

b. The "Select Diagnostics Destination" dialog box pops up. Select "Module 2 (Network No. 1, Master Station, Sta. No. 0)" and click "OK", as shown in the figure below.

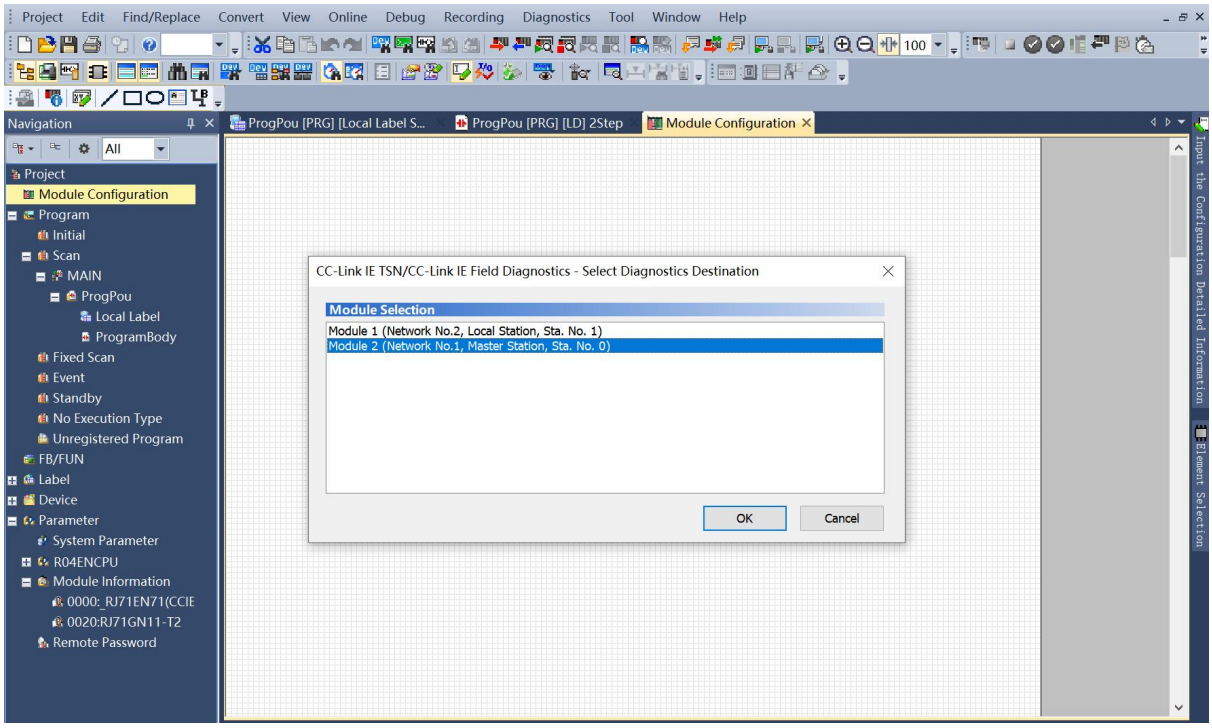

c. In the CC-Link IE TSN/CC-Link IE Field diagnostic interface, you can check whether TSN communication is normal, as shown in the following figure.

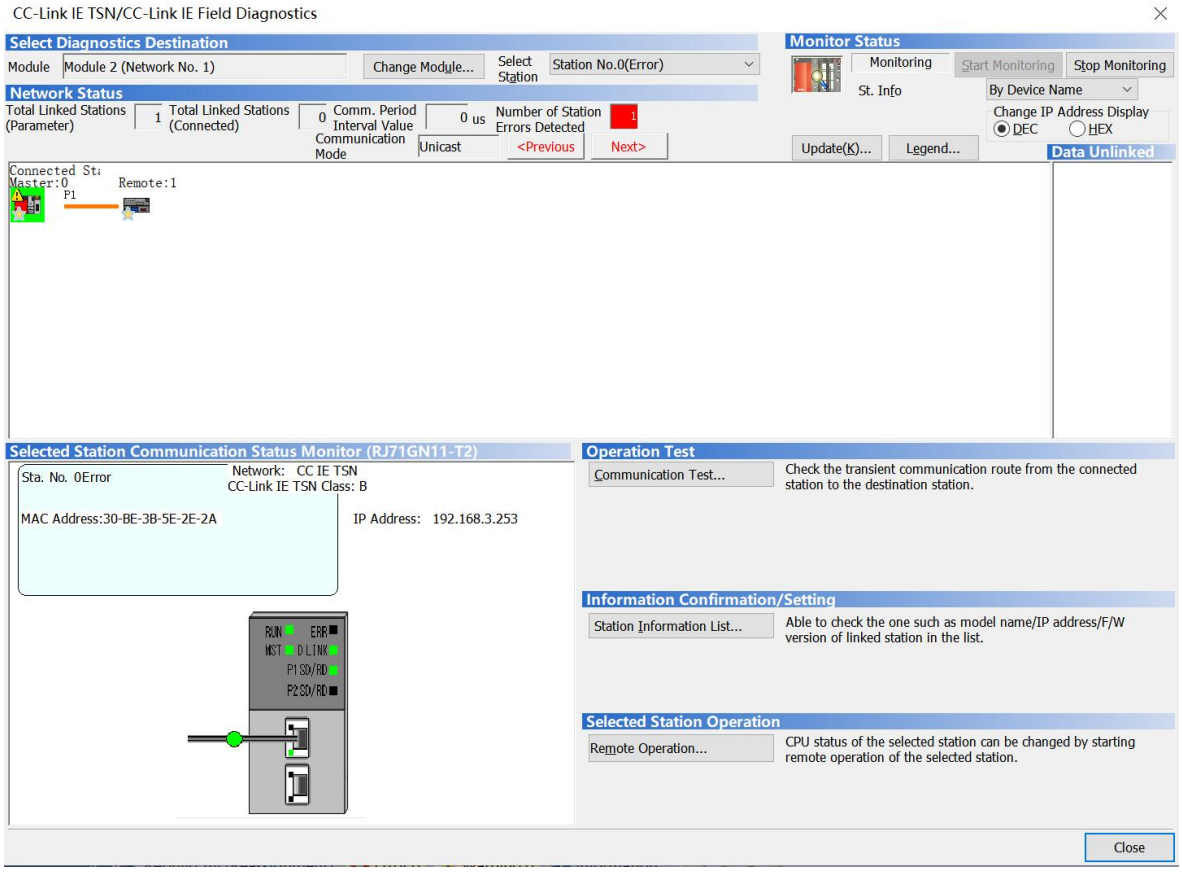

9、Parameter settings

a. In the CC-Link IE TSN configuration window, right-click the slave device and select "Open System Configuration -> Open Extension Module Configuration", as shown in the figure below.

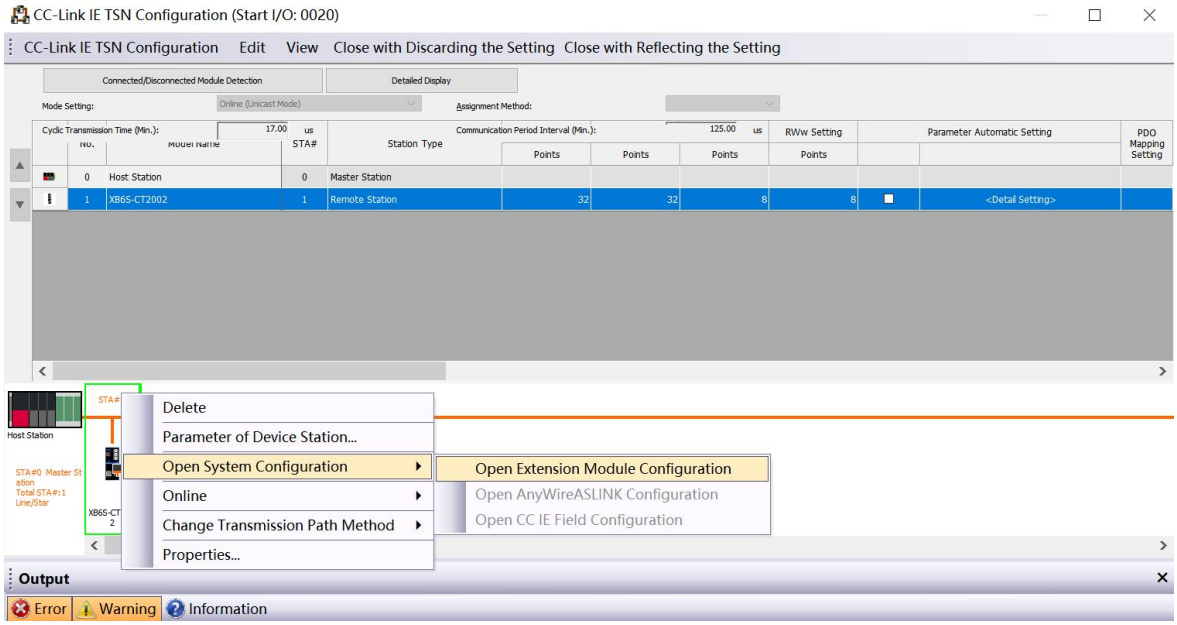

b. In the extension module configuration window, click "Connected/disconnected module detection" to automatically add IO modules, or under "Extension module selection" on the right, drag the modules one by one according to the actual topology to add them (the order must be consistent with the actual topology, otherwise the parameters cannot be read and issued), as shown in the following figure.

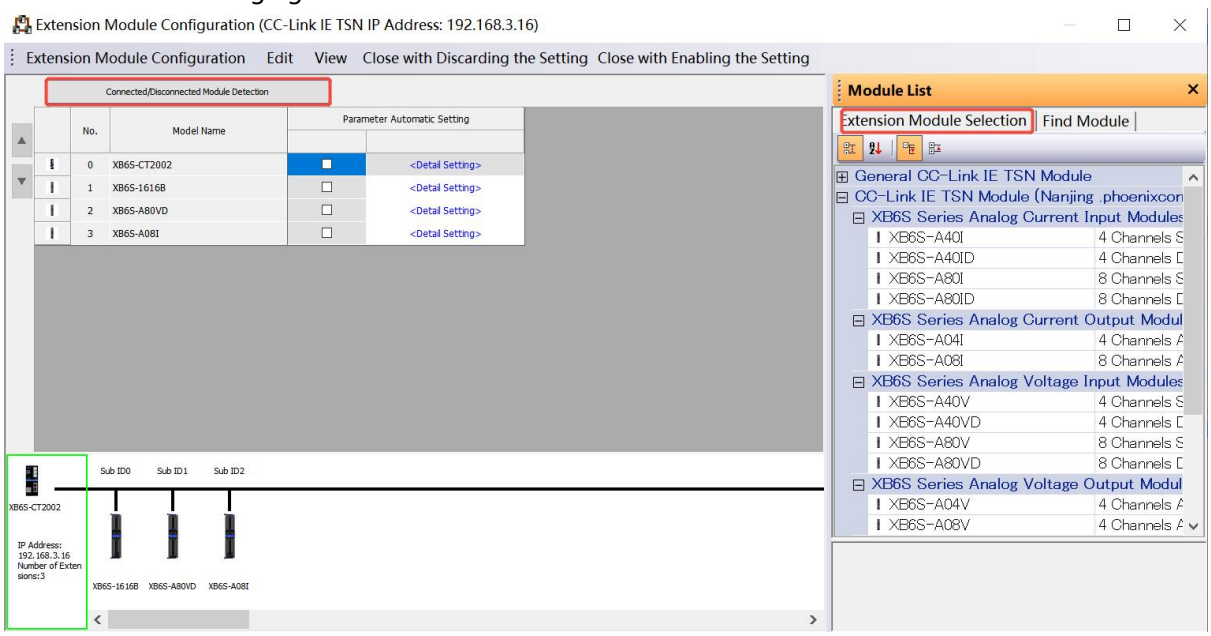

Note: After adding the IO module, you need to check the SYS light status of the IO module. If the SYS light is always on, it means that the bottom bus communication is successful; if the SYS light is flashing at 1Hz, you need to send the parameters of any IO module to trigger the topology comparison operation before you can control the soft element.

c. Select the module that needs to configure parameters and double-click "Detal Setting", as shown in the figure below.

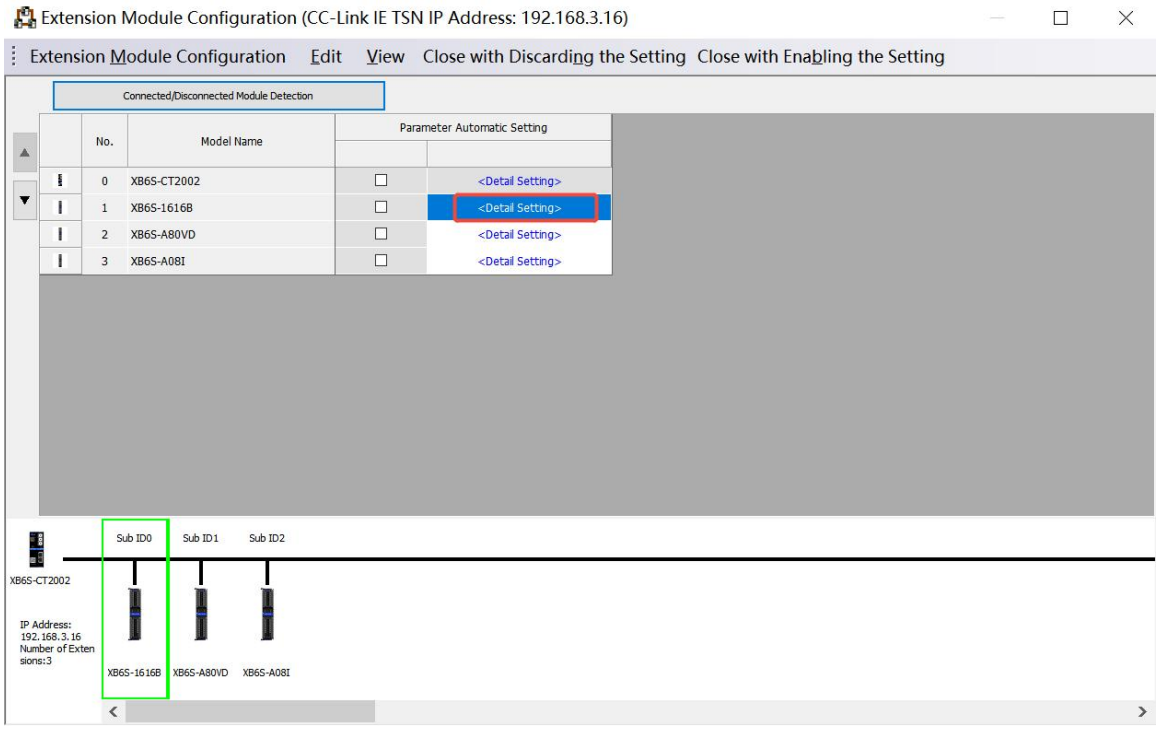

d. In the parameter pop-up window of the setting station, set the execution processing to "Parameter read", click "Execute parameter processing" to complete the reading of related parameters, as shown in the figure below.

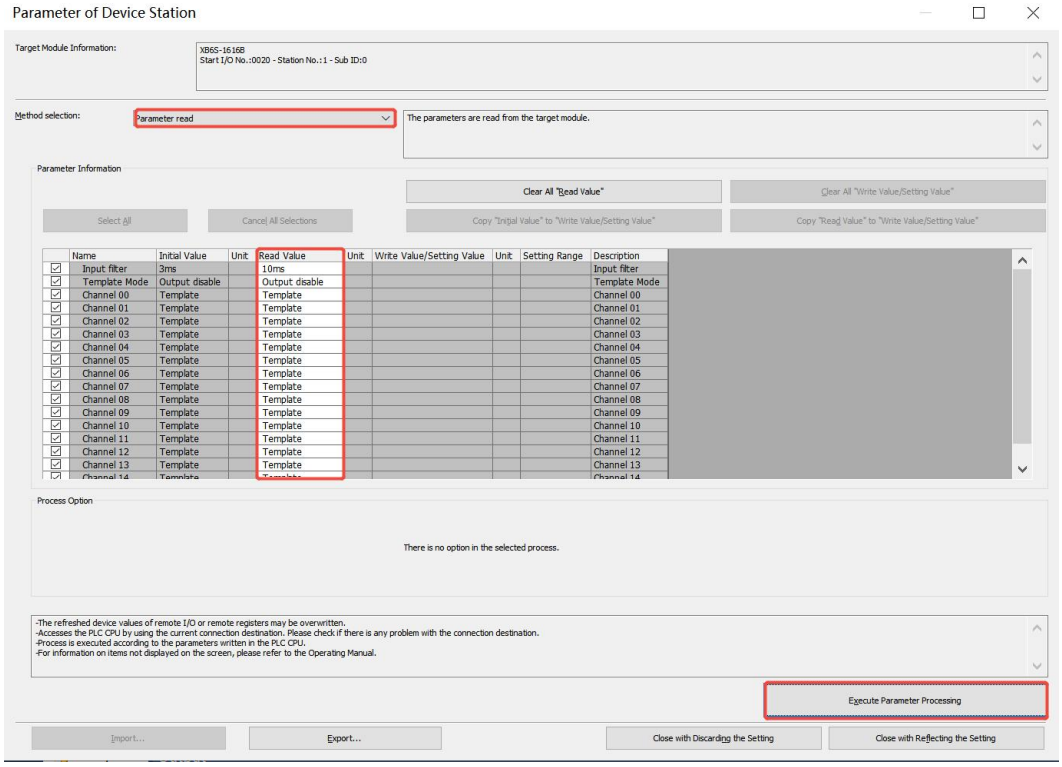

e. In the slave's parameter pop-up window, set the execution process to "Parameter write" and click "Copy [Read value] to [Write value/Setting value]", as shown in the figure below.

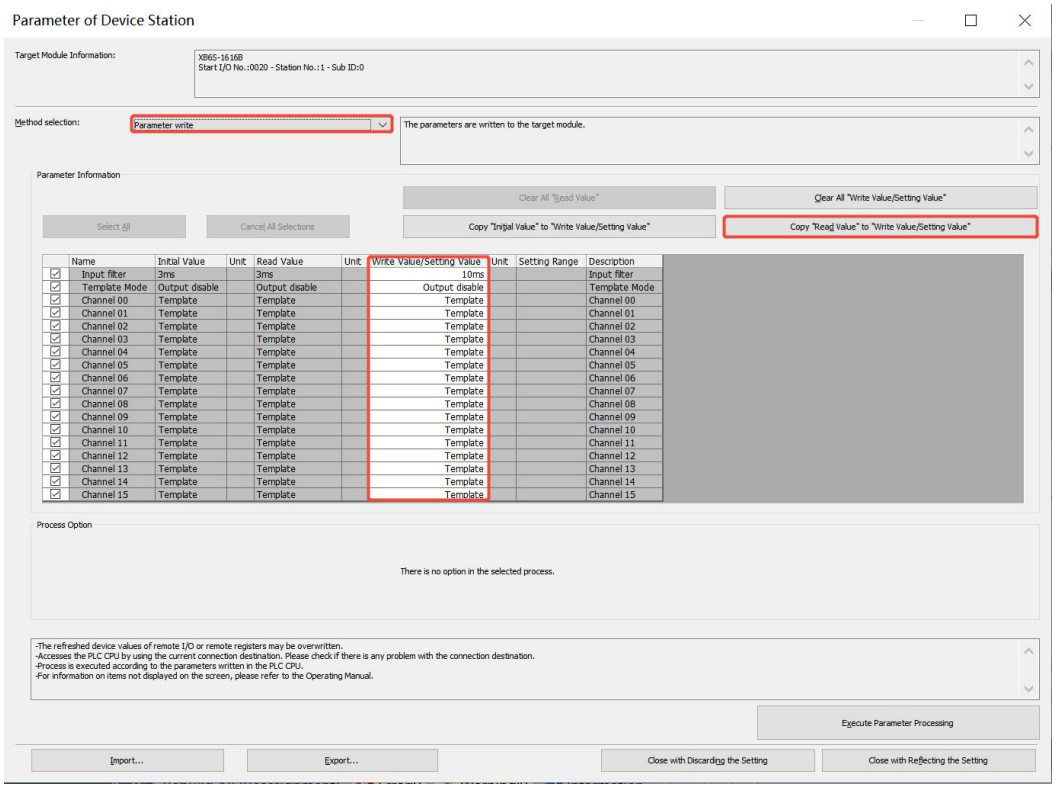

f. If you want to modify the digital input filter time parameters of the XB6S-1616B module, you can select the filter time as needed in the "Write value/setting value" of the "Input filter" function option. After setting, click "Execute parameter processing" to save the parameters to the coupler. For details, see Step 7 Download the parameters to the controller to make them effective, as shown in the figure below.

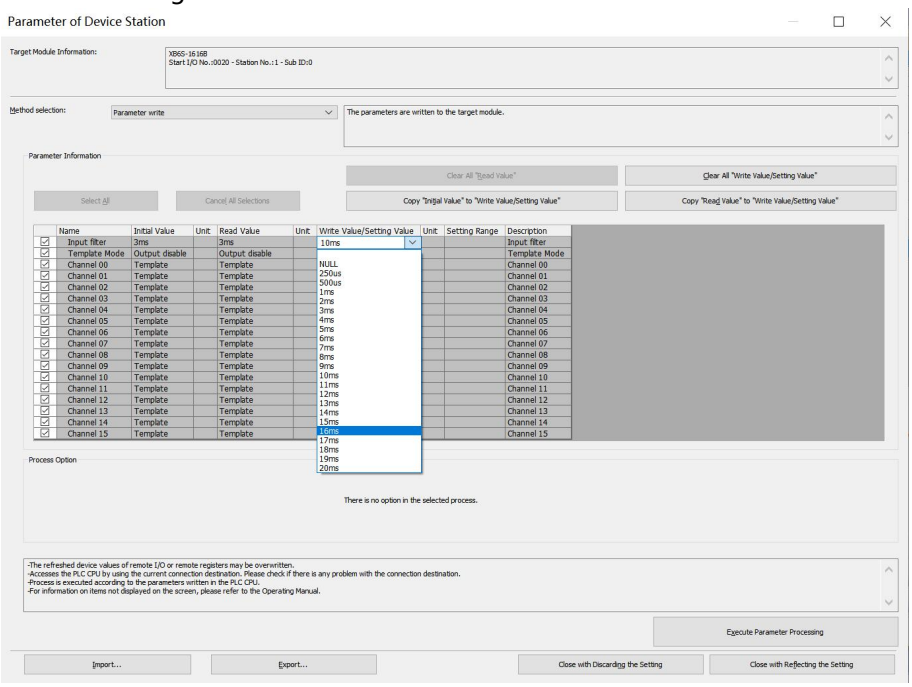

g. If you modify the digital output signal clear/hold function parameters of the XB6S-1616B module, all channels are preset to output disabled mode by default. The module channels can be configured separately. For the corresponding relationship, see 6.2.2 Clear/hold digital output signal, in the "Write value/setting value" setting, after the setting is completed, click "Execute parameter processing" to save the parameters to the coupler, see Step 7 Download the parameters to the controller to make them effective, as shown in the figure below.

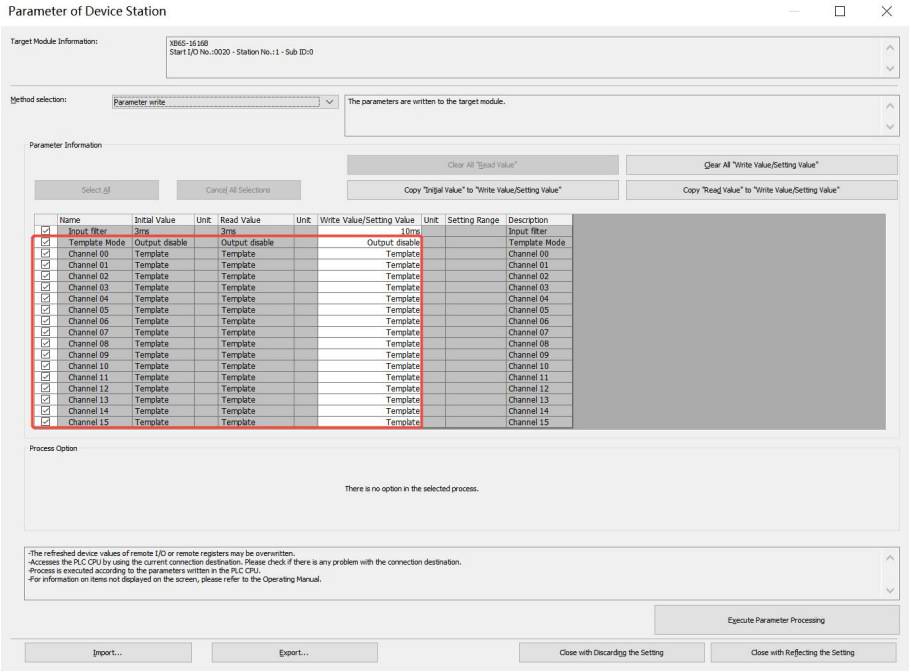

h. If you want to modify the analog input voltage range of the XB6S-A80VD module, each channel is configured independently. You can select the range as needed in the "Write Value/Setting Value" of the "Chx: Range Select" function option. After the setting is completed, click "Execute Parameter Processing" to save the parameters to the coupler. For details, see Step 7 Download the parameters to the controller to make them effective, as shown in the figure below.

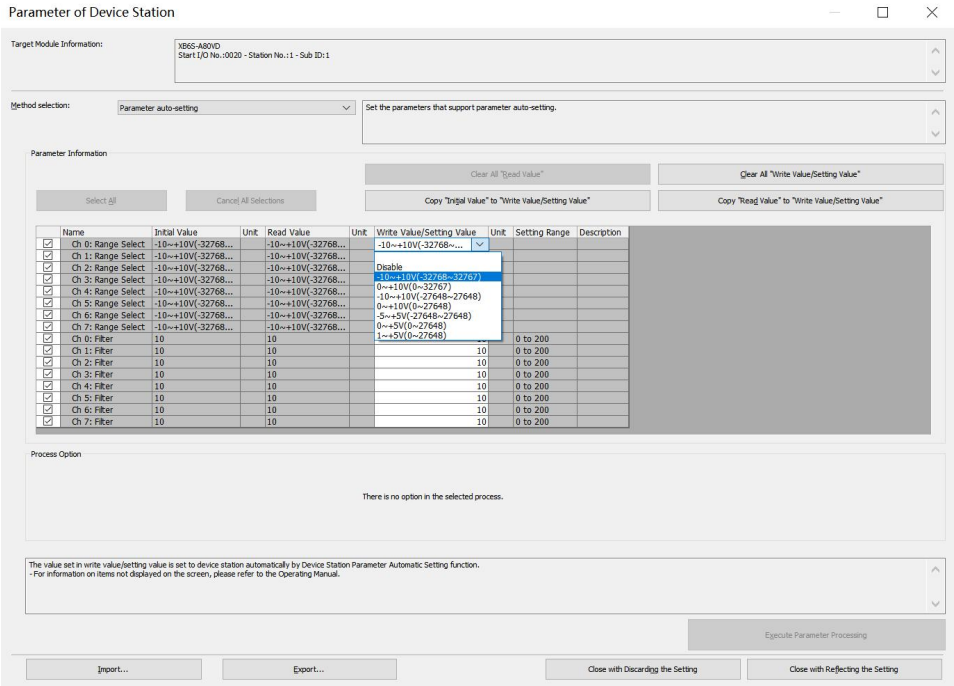

i. If you want to modify the analog input filter parameters of the XB6S-A80VD module, each channel is configured independently. You can enter the number of filter times as needed in the "Write value/setting value" of the "Chx:Filter" function option. After the setting is completed, click "Execute parameter processing" to save the parameters to the coupler. For details, see Step 7 Download the parameters to the controller to make them effective, as shown in the figure below.

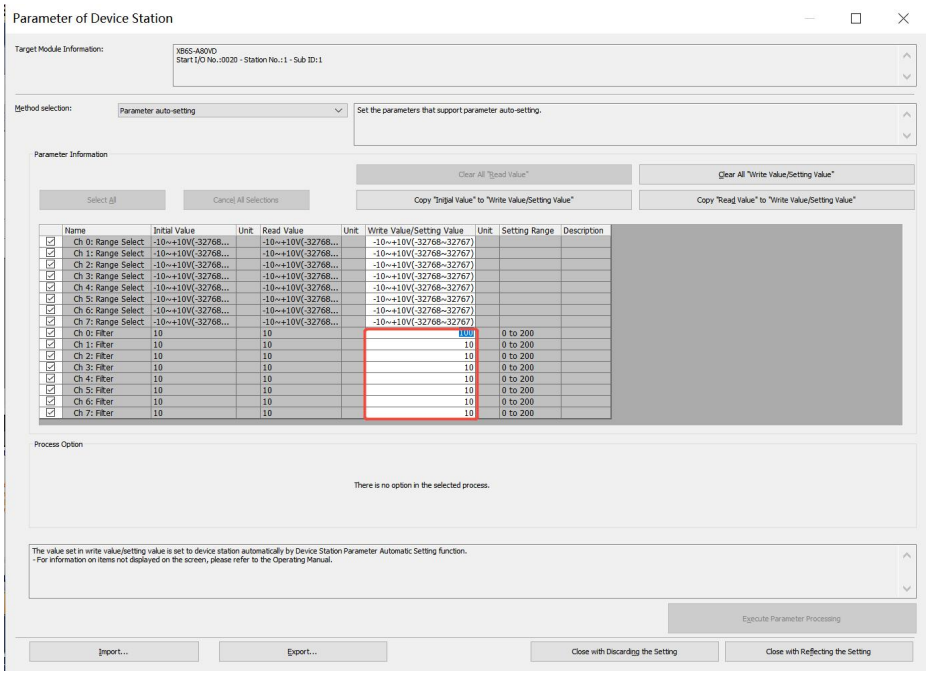

j. If you want to modify the analog output current range of the XB6S-A08I module, each channel is configured independently. You can select the channel range as needed in the "Write Value/Setting Value" of the "Chx: Range Select" function option. After the setting is completed, click "Execute Parameter Processing" to save the parameters to the coupler. For details, see Step 7 Download the parameters to the controller to make them effective, as shown in the figure below.

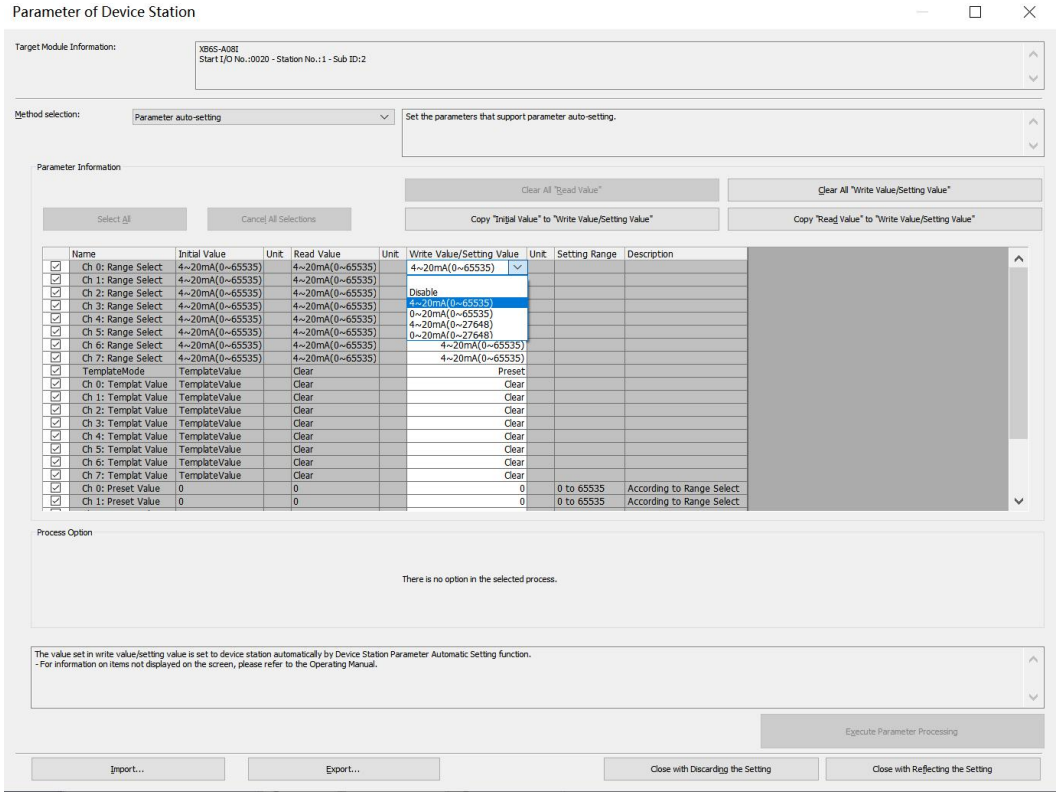

k. If you modify the analog output signal/hold function of the XB6S-A08I module, all channels are in output clear mode by default. The module channels can be configured individually. For the corresponding relationship, see 6.2.5 Clear/hold analog output signal, in the "Write value/setting value" setting, after the setting is completed, click "Execute parameter processing" to save the parameters to the coupler, see Step 7 Download the parameters to the controller to make them effective, as shown in the figure below.

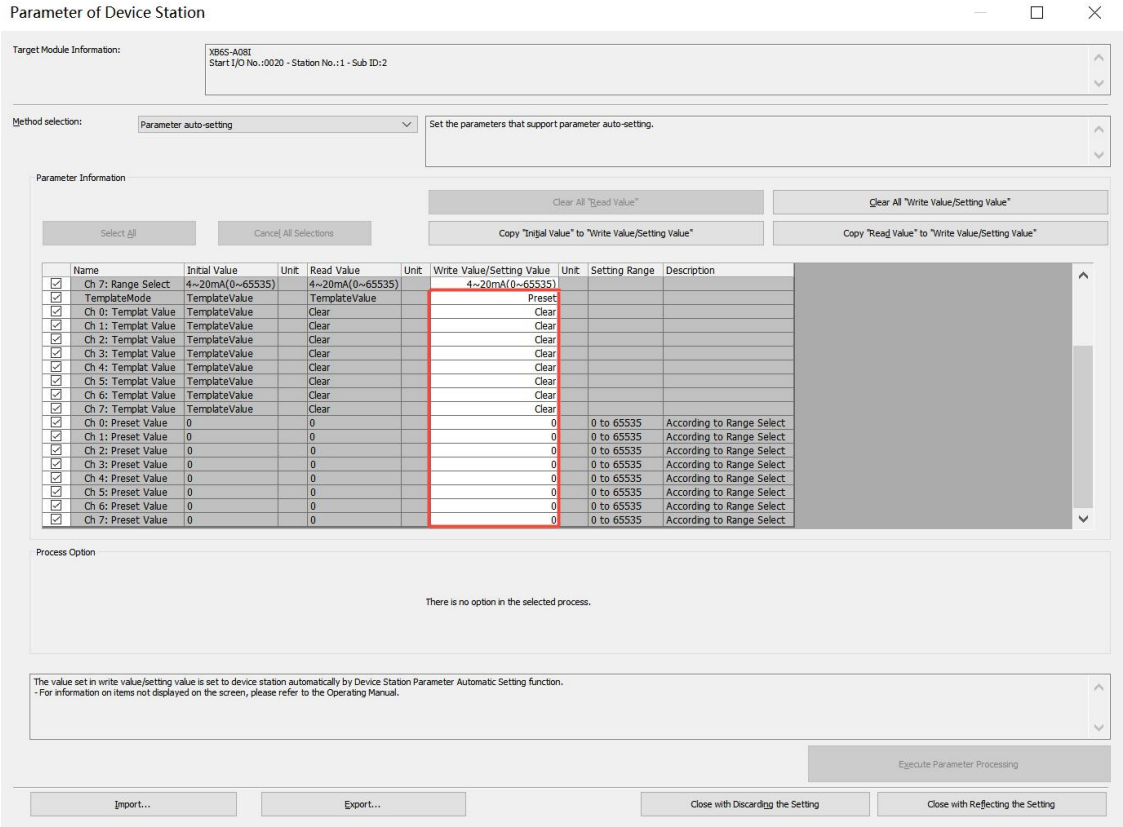

l. After the parameters are configured, in the CC-Link IE TSN configuration interface, modify the points according to the actual configuration module occupancy value. After the modification is completed, click "Close with reflecting the setting", as shown in the following figure.

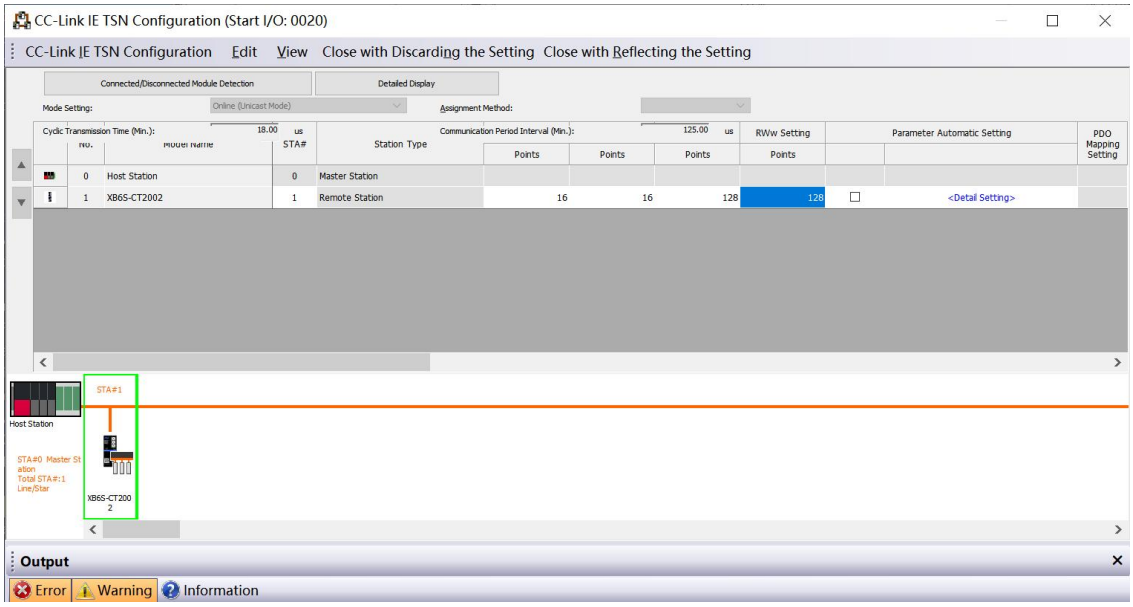

m. In the CC-Link IE TSN configuration window, right-click the slave device and select "Parameter of Device Station", as shown in the figure below.

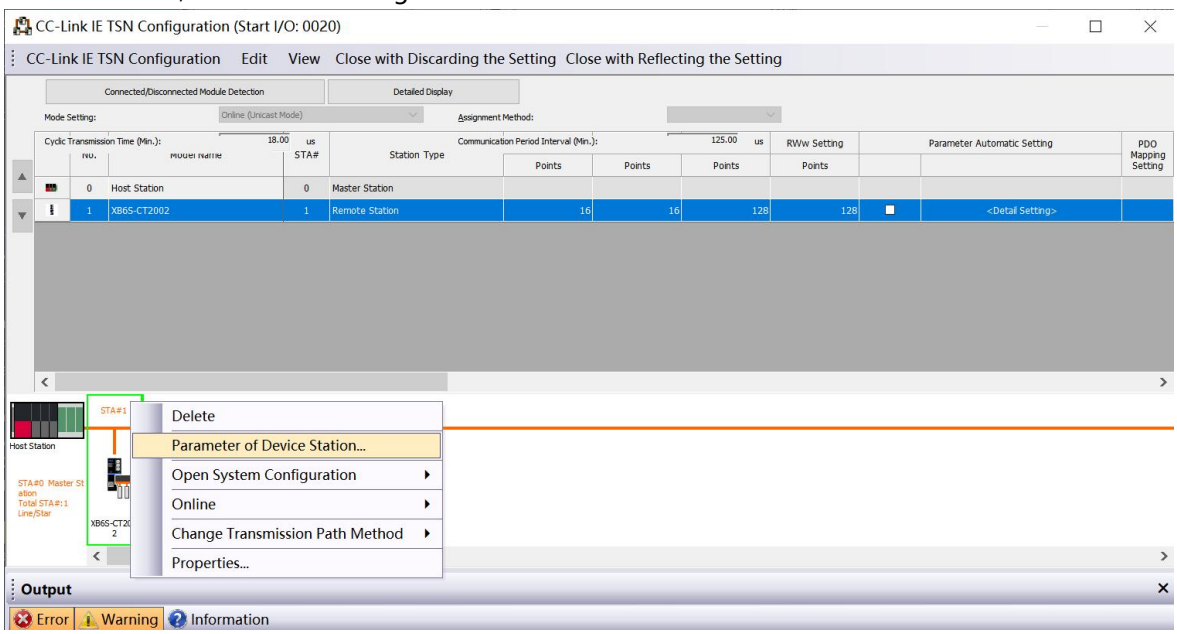

n. On the parameter page of the device station, you can read and set the parameters of the coupler. Set the execution process to "Parameter read", click "Execute parameter processing", and complete the reading of related parameters, as shown in the figure below.

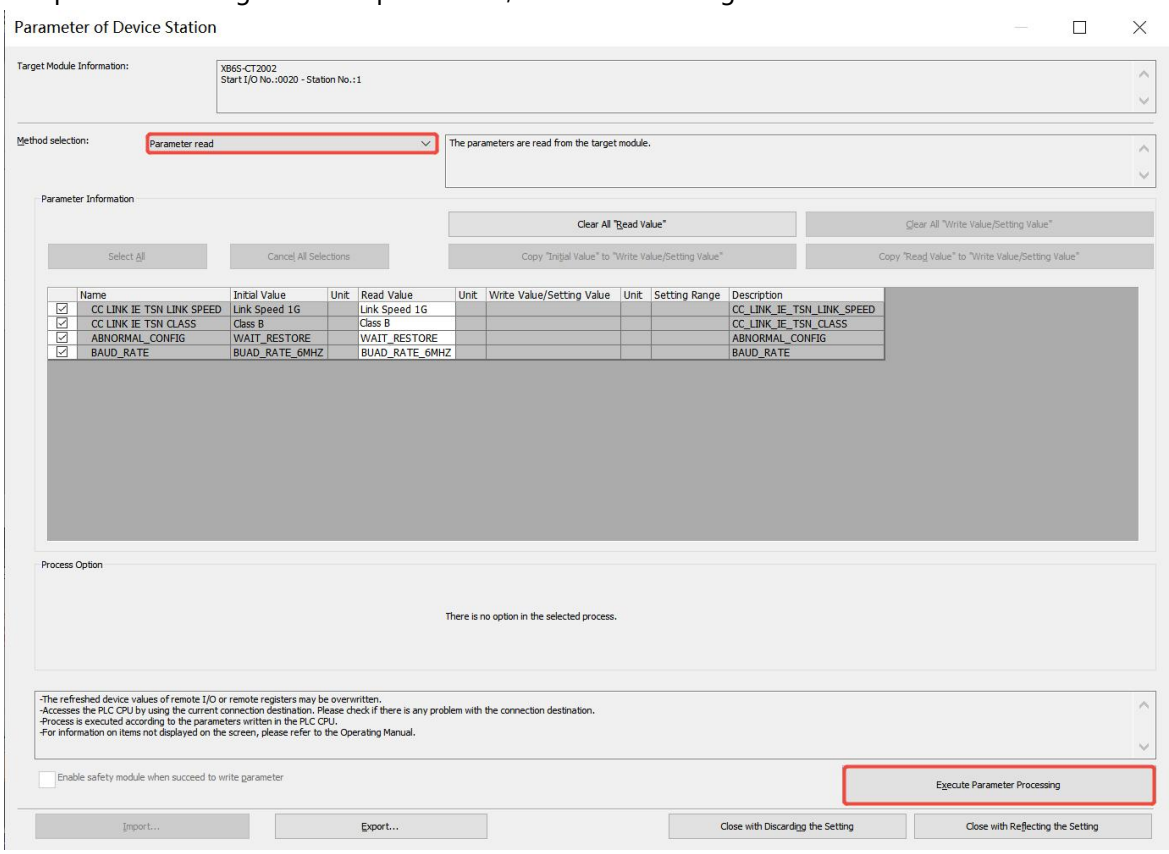

o. In the parameter pop-up window of the device station, set the execution process to "Parameter write" and click "Copy [read value] to [write value/set value]". For example, to modify the communication abnormality configuration parameters of the coupler, you can select the interaction state as needed in the "write value/setting value" of the "ABNORMAL_CONFIG" function option. After the setting is completed, click "Execute parameter processing" to save the parameters to the coupler. For details, see Step 7 Download the parameters to the controller to make them effective, as shown in the figure below.

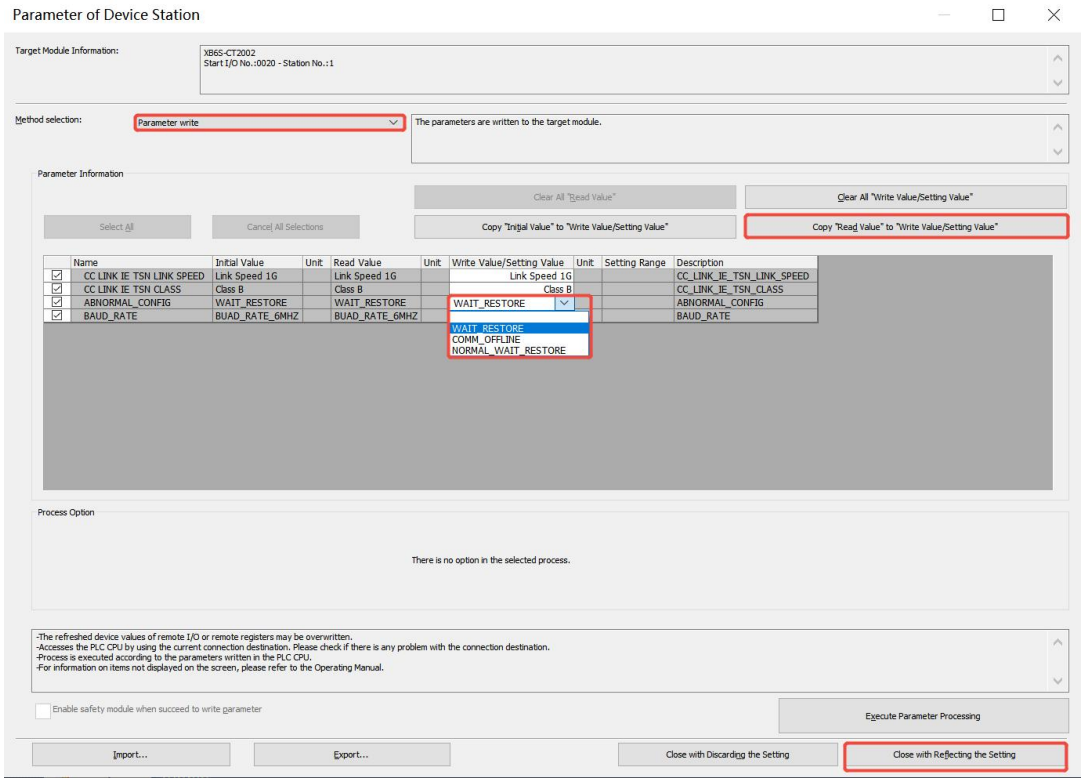

10、 Monitoring Settings

a. Select the menu bar "Online -> Monitor -> Device/Buffer Memory Batch Monitor", as shown below.

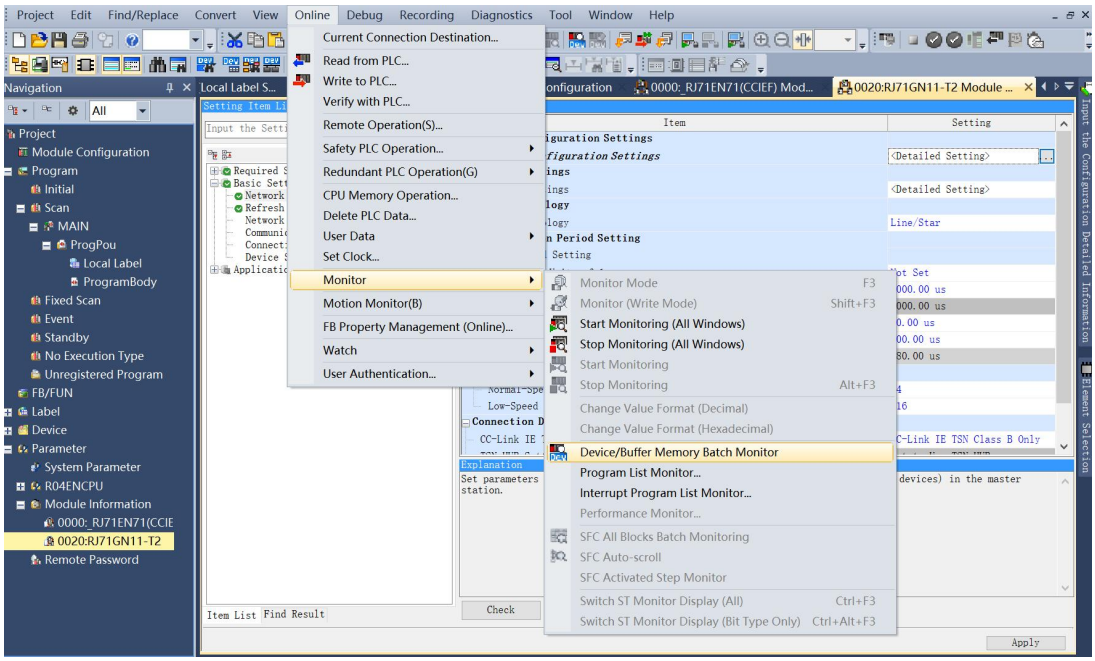

b. Repeat the above operation to establish four monitoring interfaces. Enter the parameters of "Remote Input (RX) Refresh Device", "Remote Output (RY) Refresh Device", "Remote Register (RWr)" and "Remote Register (RWw)" set in the network parameter setting interface in the "Device Name" of the four monitoring interfaces, that is, "X100", "Y100", "D1000" and "D2000", and the monitoring setting is completed.

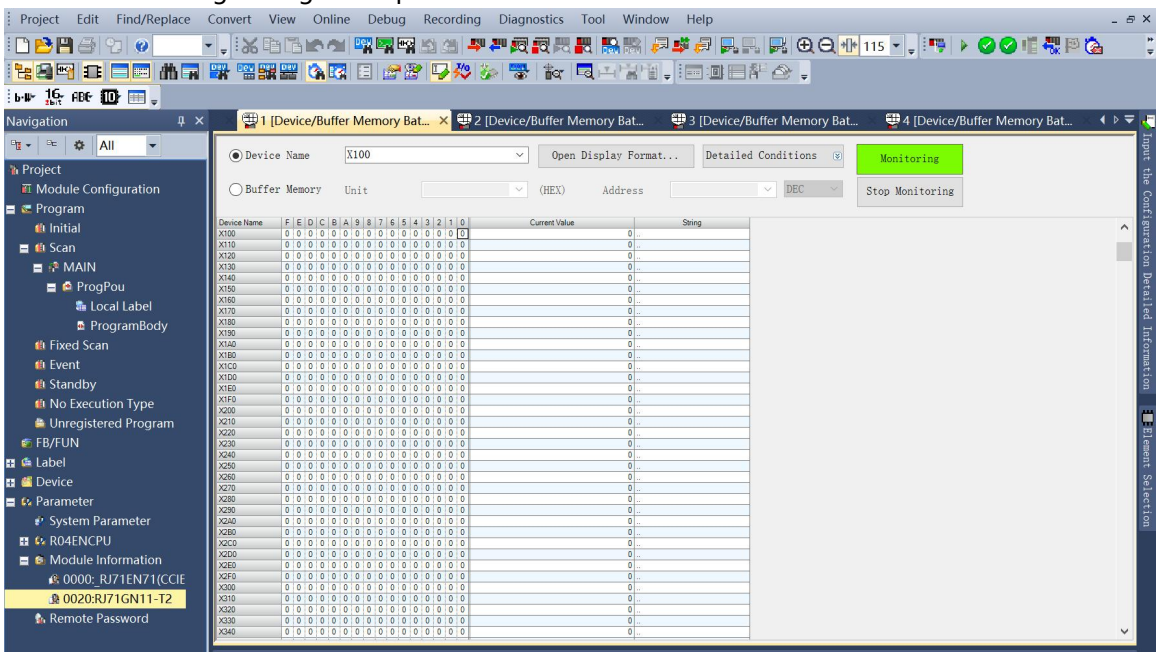

c. The XB6S-1616B module has 16 input channels, each channel occupies 1 bit, corresponding to X100 (0~F). When input channel 0 inputs a valid voltage, the module channel 0 indicator light is always on, and the monitoring interface X100 value is 1, as shown in the figure below.

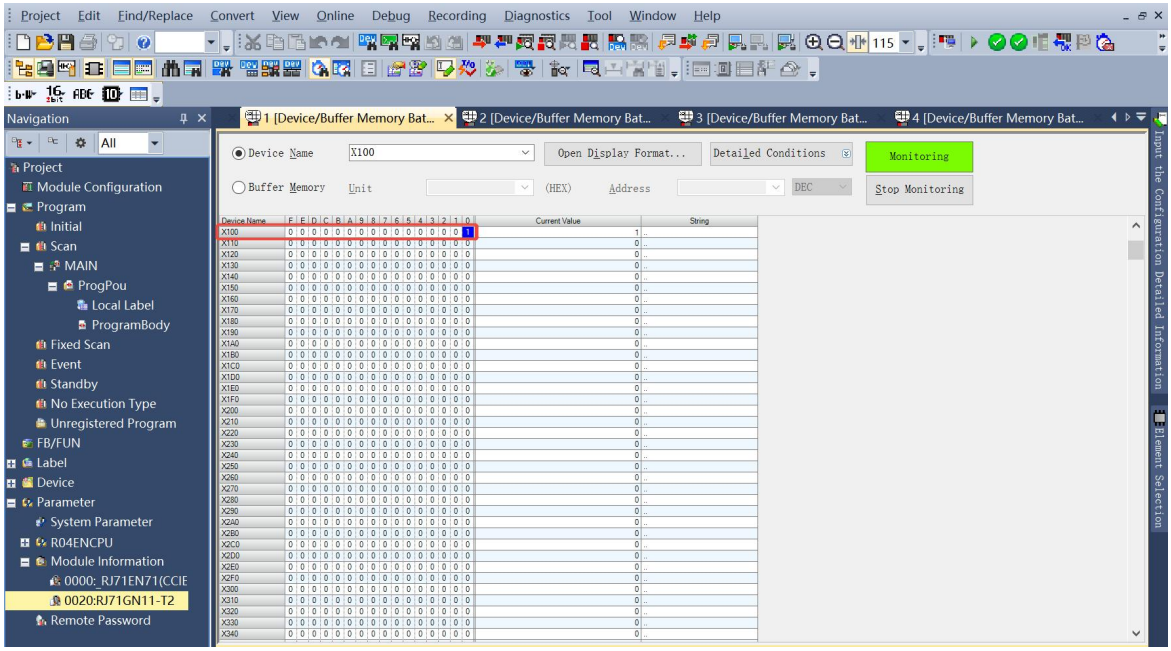

d. The XB6S-1616B module has 16 output channels, each channel occupies 1 bit, corresponding to Y100 (0~F). Double-click the value to modify the channel value. When the value of any channel from 0 to F is 1, the indicator light of the corresponding channel is always on. When the channel value is 0, the indicator light of the corresponding channel is off. The monitoring interface is shown in the figure below.

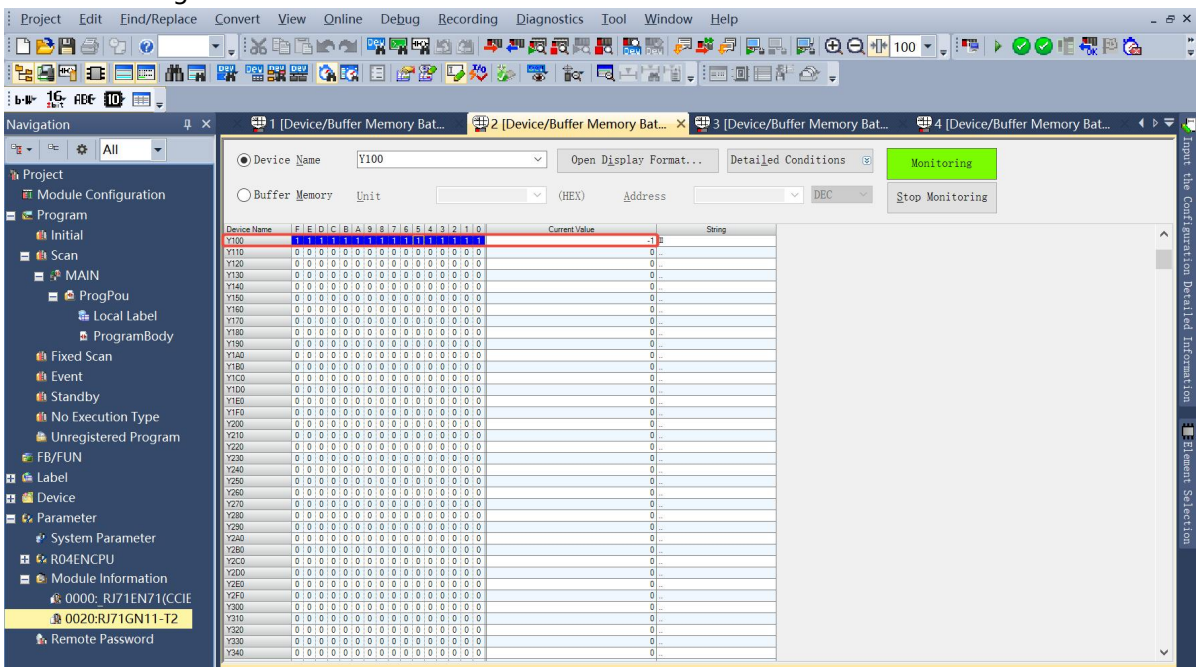

e. The XB6S-A80VD module has 8 analog input channels, each channel occupies 2 bytes, the starting address is D1000, corresponding to D1000 (0~F)~D1007 (0~F), and the input voltage code value of each channel can be viewed in the monitoring interface. The monitoring interface is shown in the figure below.

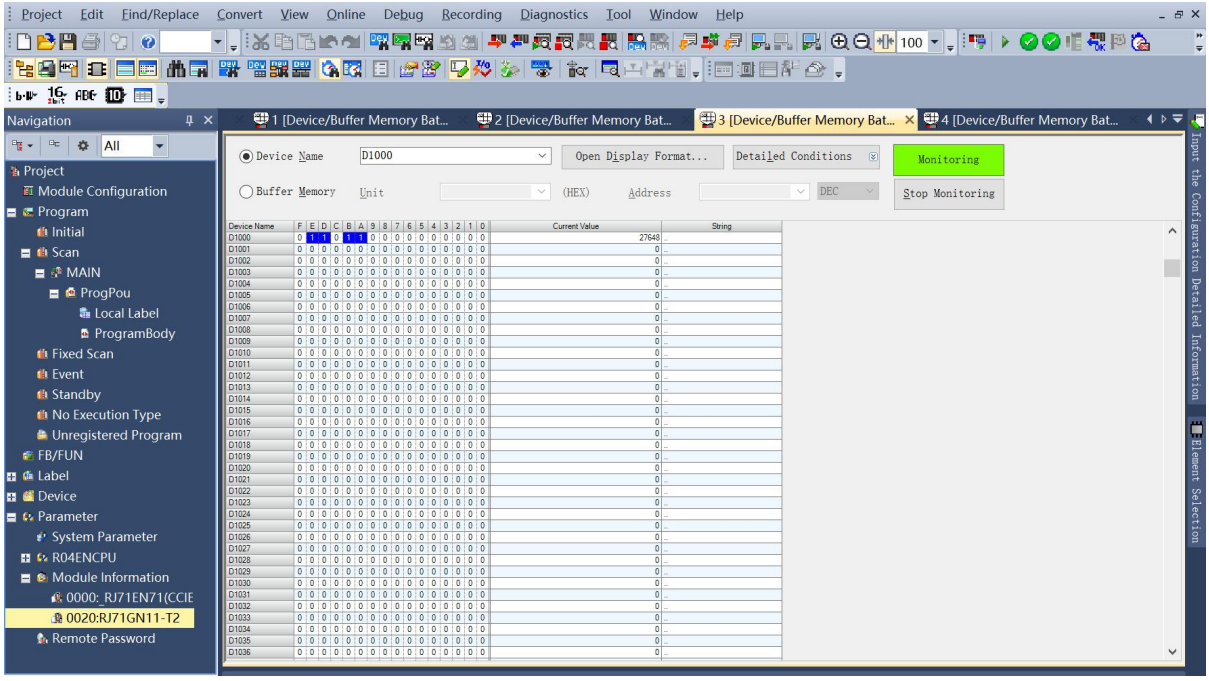

f. The XB6S-A08I module has 8 analog output channels, each channel occupies 2 bytes, the starting address is D2000, corresponding to D2000 (0~F)~D2007 (0~F), the values of D2000~D2007 can be modified to current code values, and the monitoring interface is shown in the figure below.

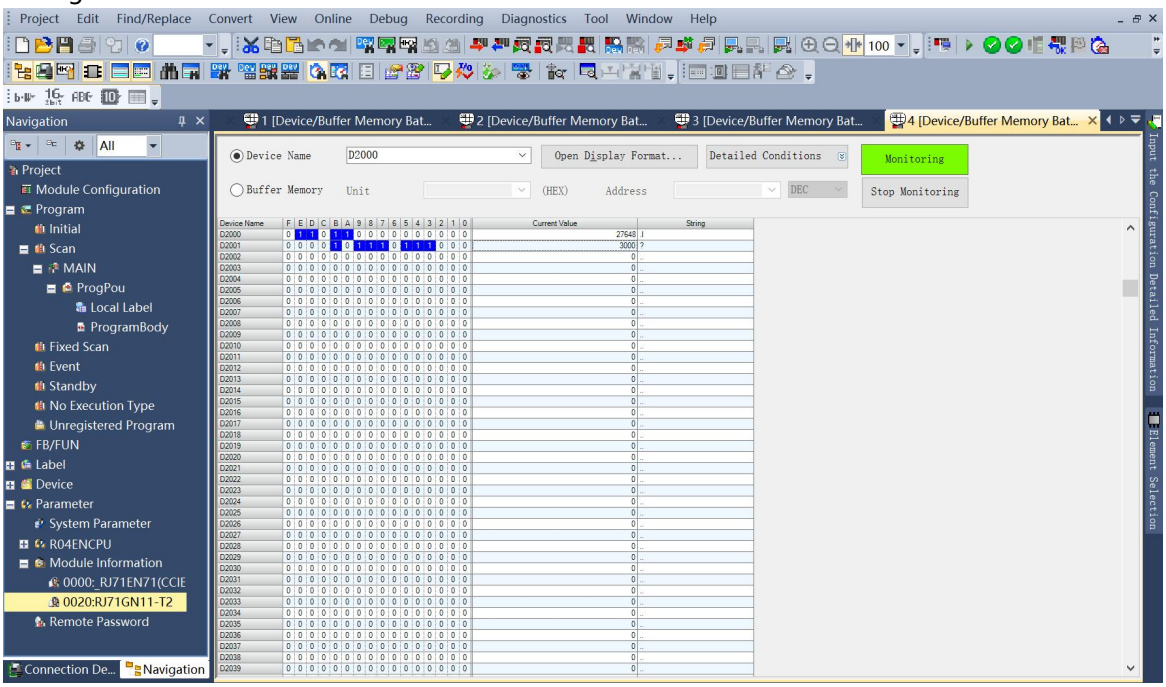

6.5.2 Application in IO Config Tool software environment

1、Preparation

- **Hardware Environment**
  - **Module preparation. This description takes the XB6S-CT2002+XB6S-1616B+XB6S-A80VD+XB6S-A08I topology as an example.**
  - **A computer with IO Config Tool pre-installed**
  - **Special shielded cable**
  - **Switching power supply**
- **Hardware configuration and wiring**

  Please follow the 4 Installation and removal"and"5 Wiring Request action
- **Computer IP requirements**

  Set the IP address of the computer's Ethernet port and make sure it is in the same network segment as the coupler.
- **Module power on**

  After checking that the wiring is correct, power on the coupler module + I/O module device combination.

2、Scan Devices

a. Open the IO Config Tool software, select the "Ethernet" connection, select the network port with the same network segment as the module IP address in the "Please select network card" drop-down box, and click "Scanning Device", as shown in the following figure.

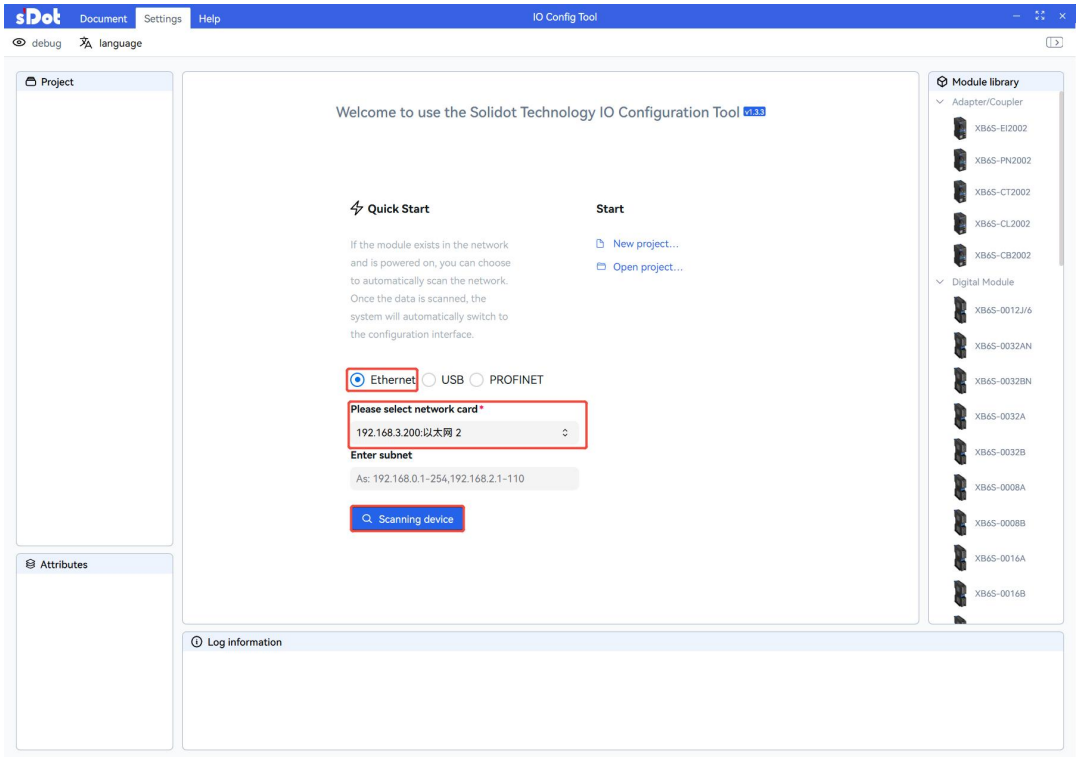

b. After scanning the device successfully, enter the device overview page, which mainly consists of six functions: ① Menu bar, ② Project bar, ③ Module properties, ④ Module configuration overview, ⑤ Log information, and ⑥ Module library, as shown in the figure below.

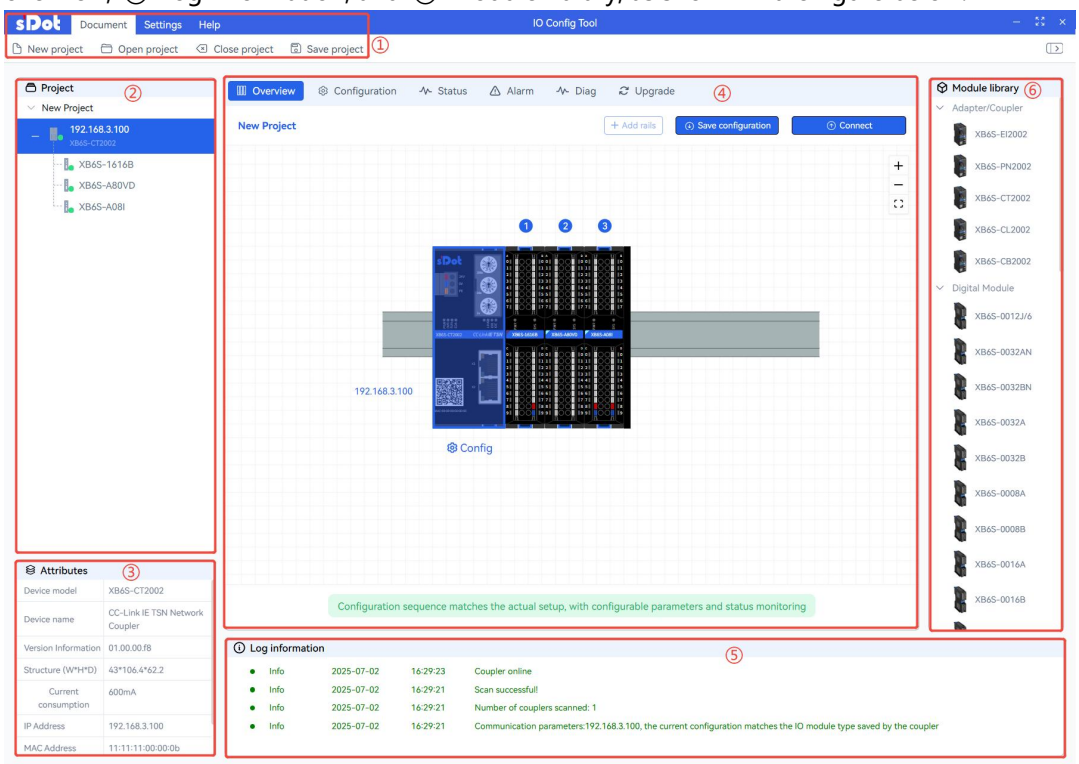

Note: The log information can show the number of couplers scanned.

3、Parameter settings

a. Click "Settings->Debugging" in the menu bar, and the debug mode confirmation window will pop up. Click "OK" to enter the debug mode, as shown in the figure below.

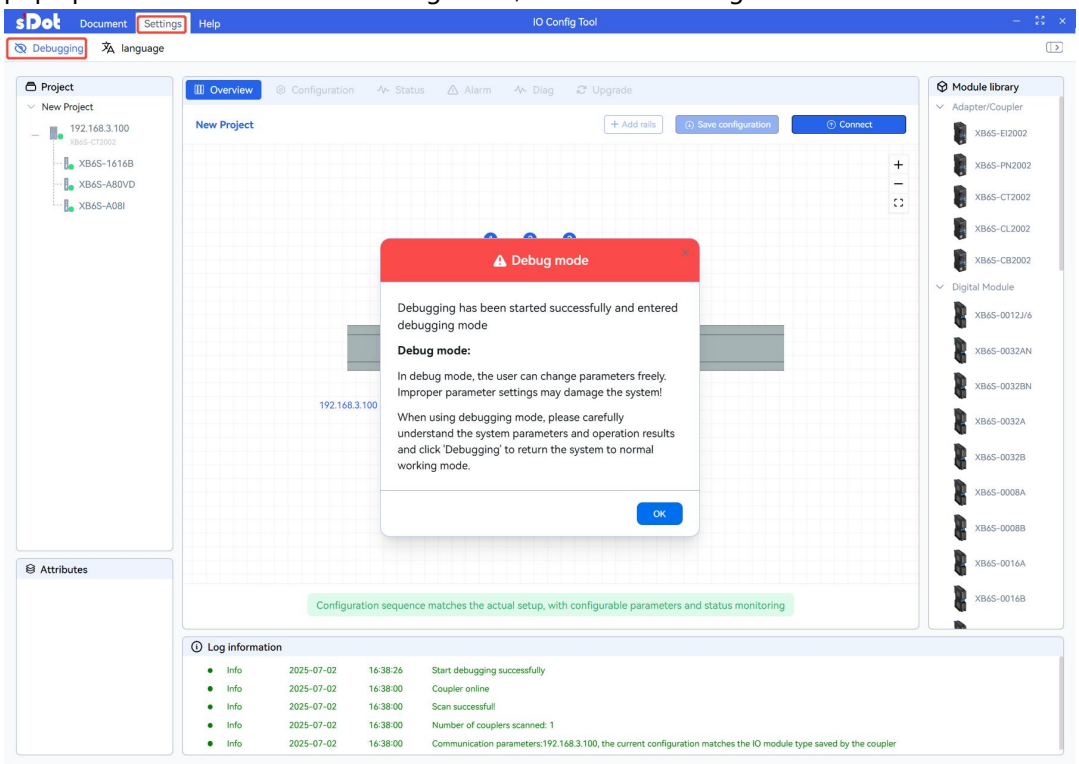

Note: Configuration parameters must be configured in debug mode.

b. In debug mode, click the XB6S-CT2002 module and click "Configuration", as shown in the figure below.

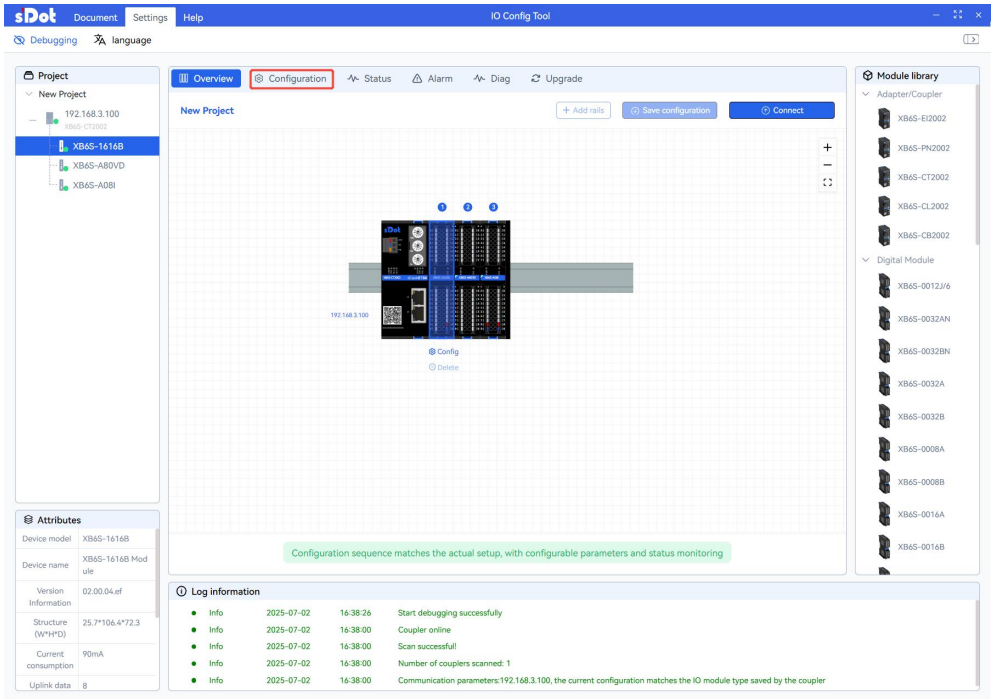

c. On the XB6S-CT2002 parameter setting page, you can view the module's installation information, electrical information, and communication parameters; configure the module's network parameters and configuration parameters, such as the IO communication exception configuration parameters, which can be configured according to actual usage needs. After the parameter configuration is completed, click "Issued" and "Restart Coupler" in sequence. After restarting, the configured parameters will take effect, as shown in the figure below.

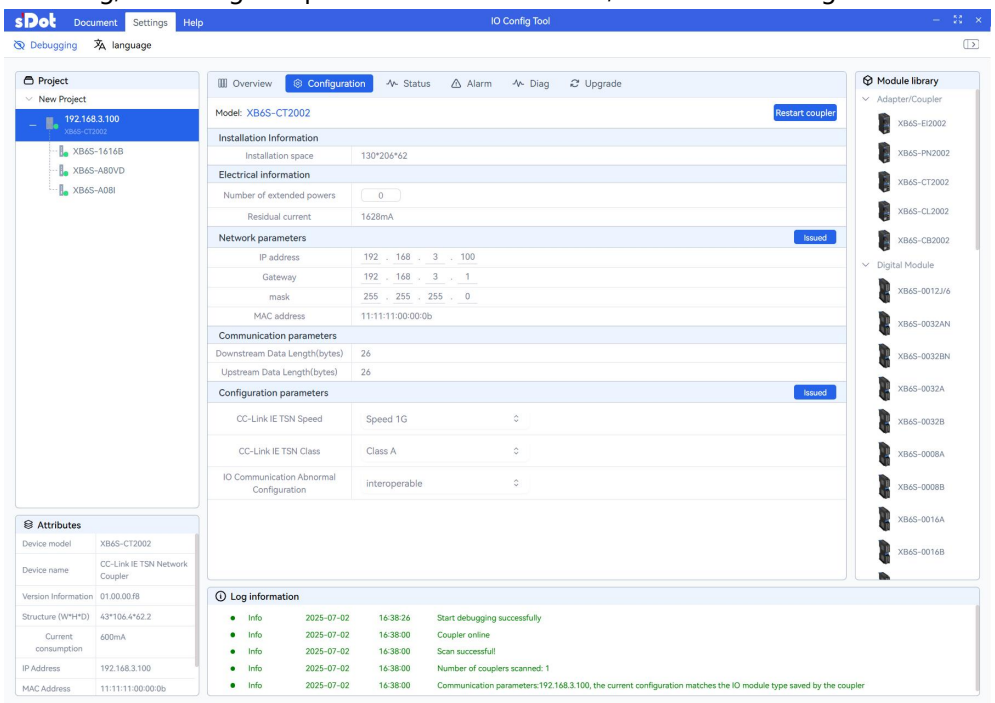

d. Select the XB6S-1616B module in the project column on the left to enter the XB6S-1616B parameter setting page. You can configure the digital input filtering and output signal clear/hold functions. The parameters can be configured according to actual needs, as shown in the figure below.

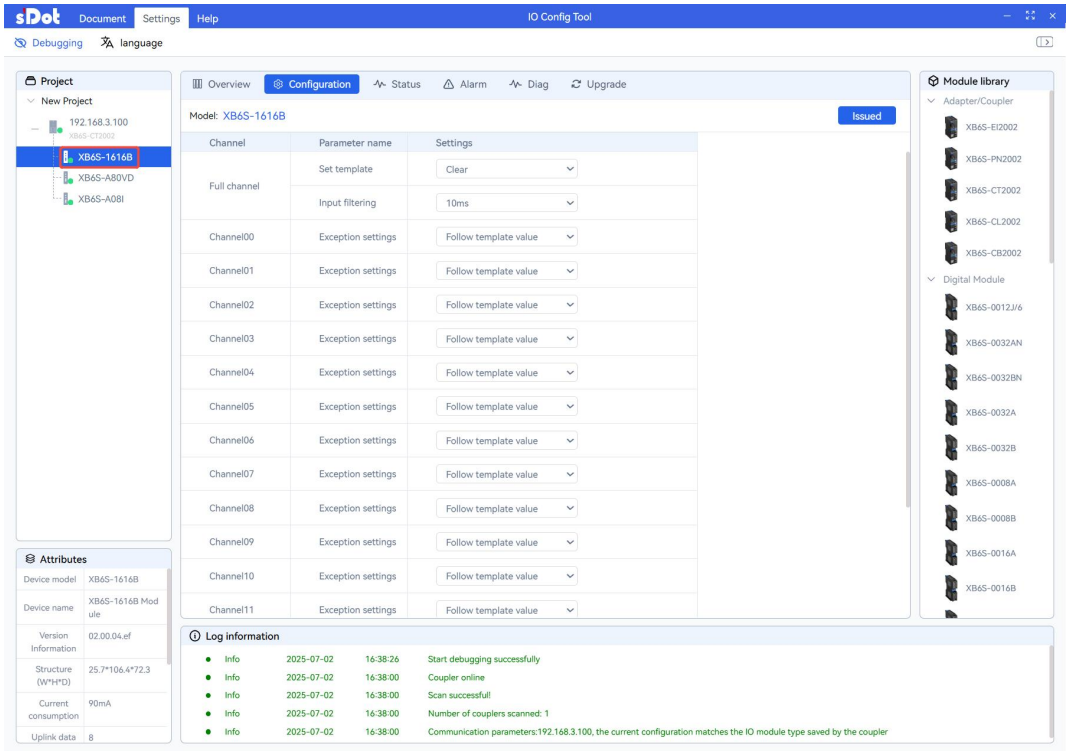

e. The digital input filter time can be set in the range of 0~20ms. After the configuration is completed, click "Issued", as shown in the following figure.

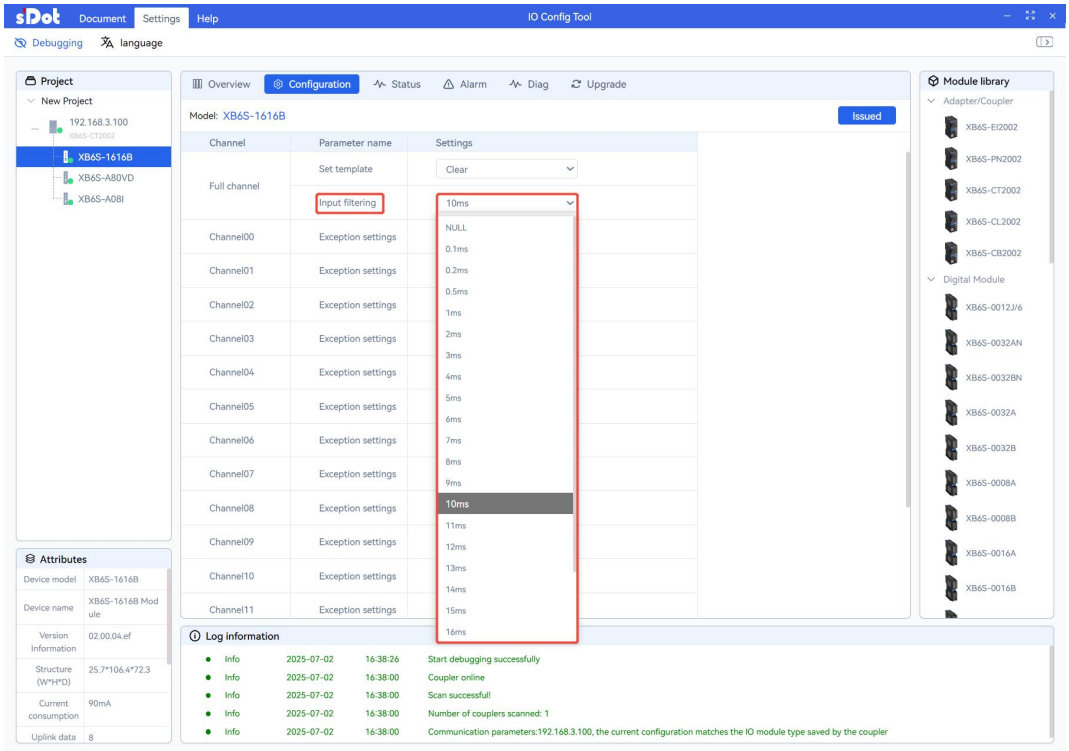

f. Digital output signal clear/hold function, all channels are preset to output clear mode by default, module channels can be configured separately, the corresponding relationship is shown in 6.2.2 Clear/hold digital output signalAfter the configuration is completed, click “Issued”, as shown in the following figure.

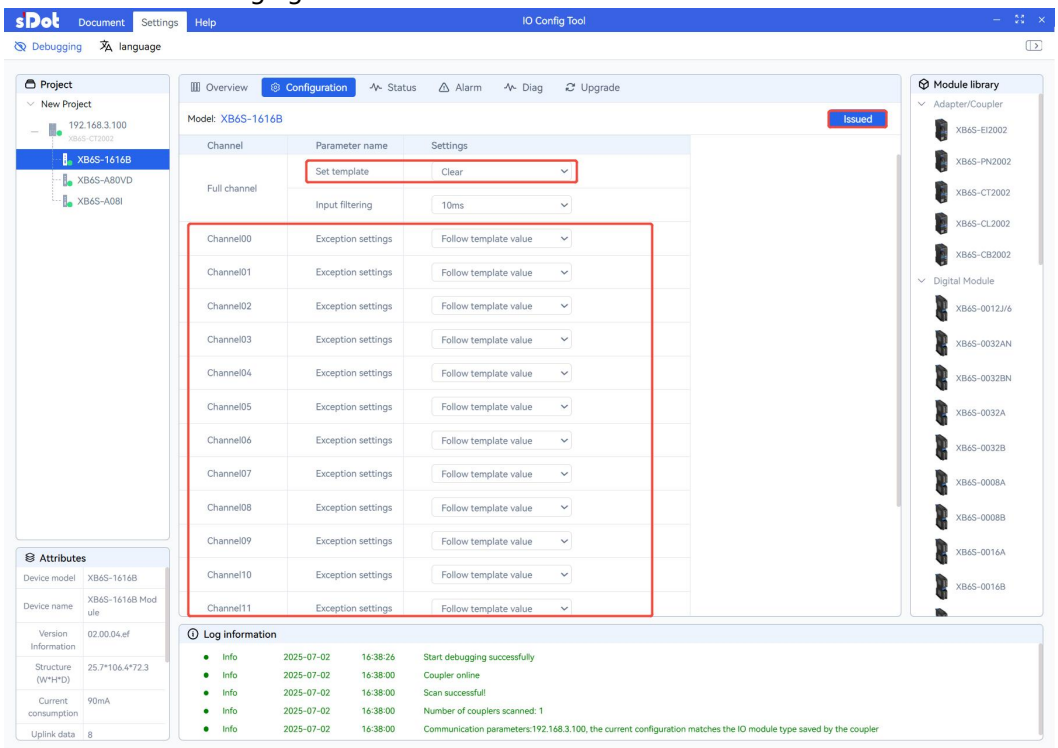

g. Select the XB6S-A80VD module in the project column on the left to enter the XB6S-A80VD analog voltage input module parameter setting page. You can configure the analog voltage range and analog input filter parameters. The parameters can be configured according to actual needs, as shown in the figure below.

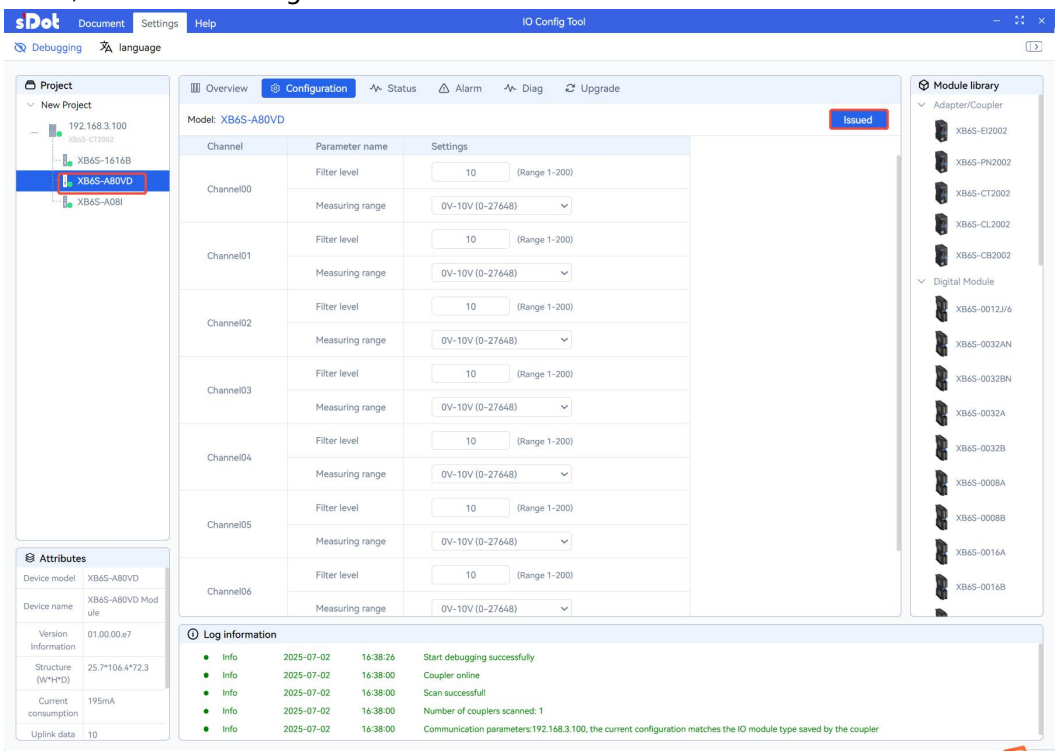

h. The analog input voltage can be configured into 8 ranges. Each channel is configured independently. After the configuration is completed, click "Issued", as shown in the following figure.

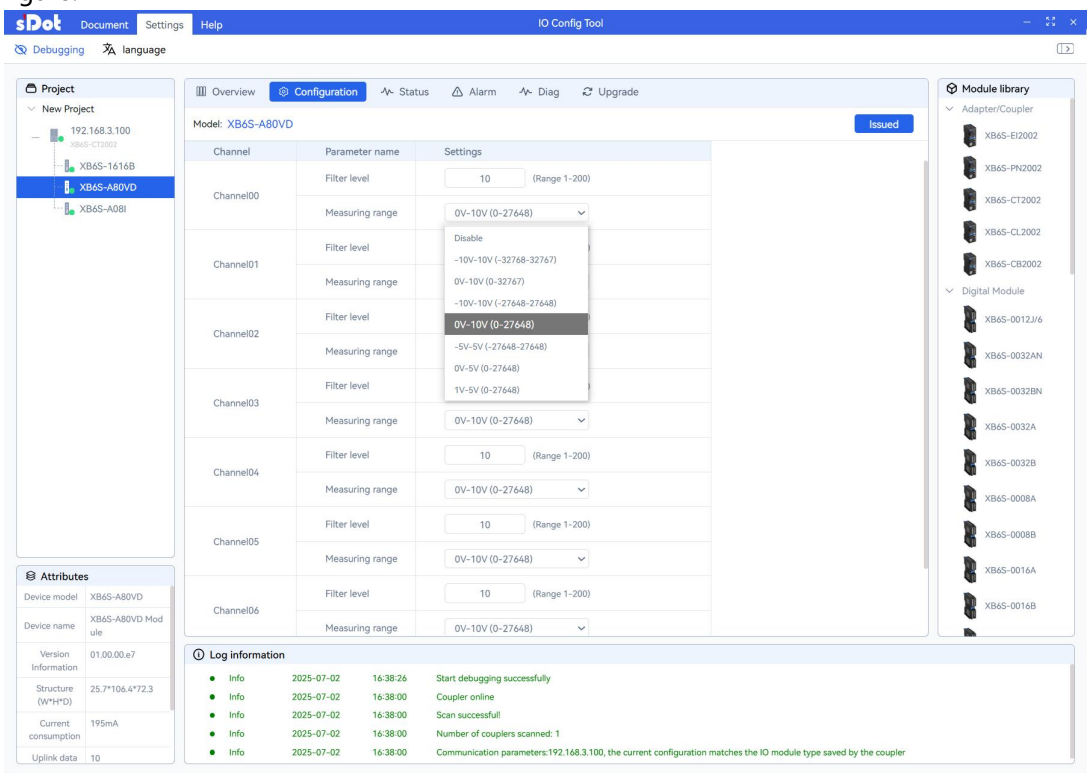

i. The analog input filter can be configured in the range of 1 to 200, and supports single-channel independent configuration. After the configuration is completed, click "Issued", as shown in the following figure.

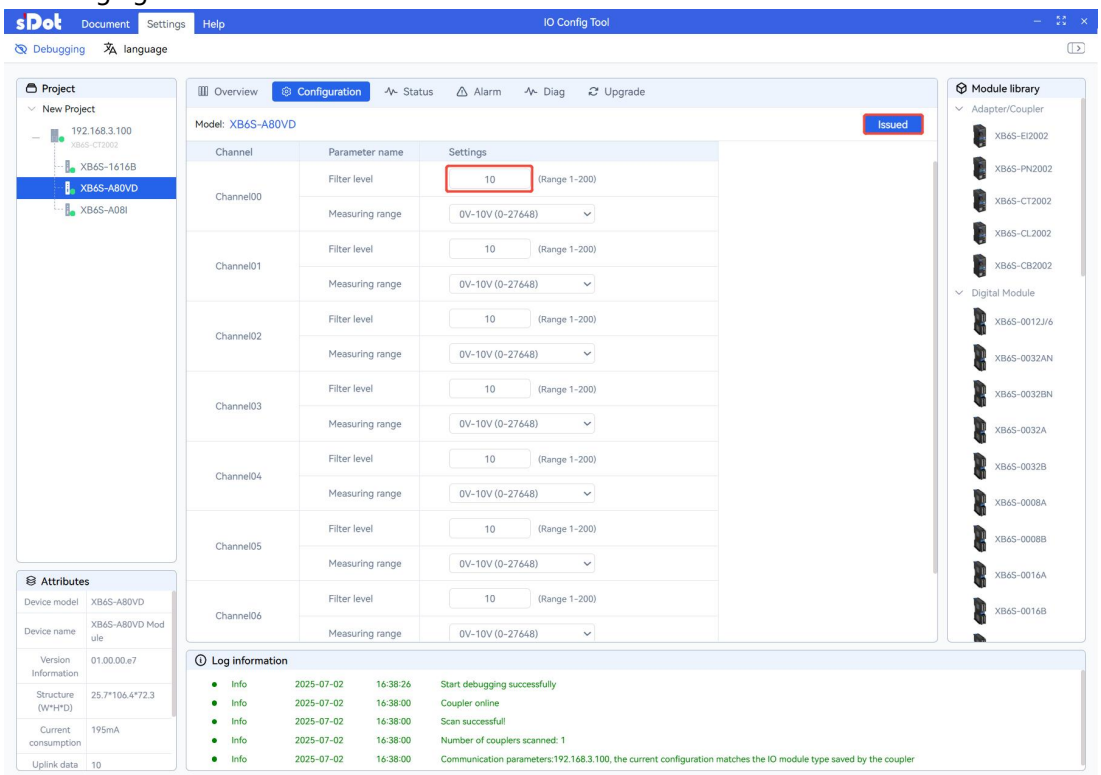

j. Select the XB6S-A08I module in the project column on the left to enter the XB6S-A08I analog current output module parameter setting page. You can configure the analog current range and analog output signal clear/hold parameters. The parameters can be configured according to actual needs, as shown in the figure below.

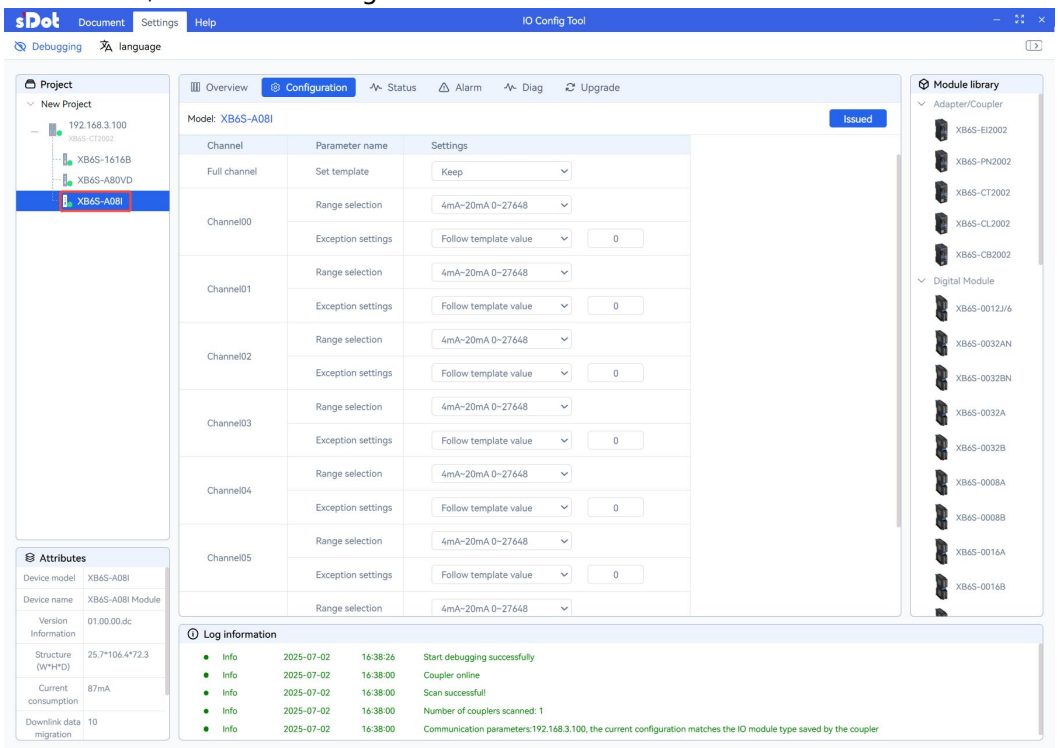

k. The analog output current can be configured into 5 ranges. Each channel is configured independently. After the configuration is completed, click "Issued", as shown in the figure below.

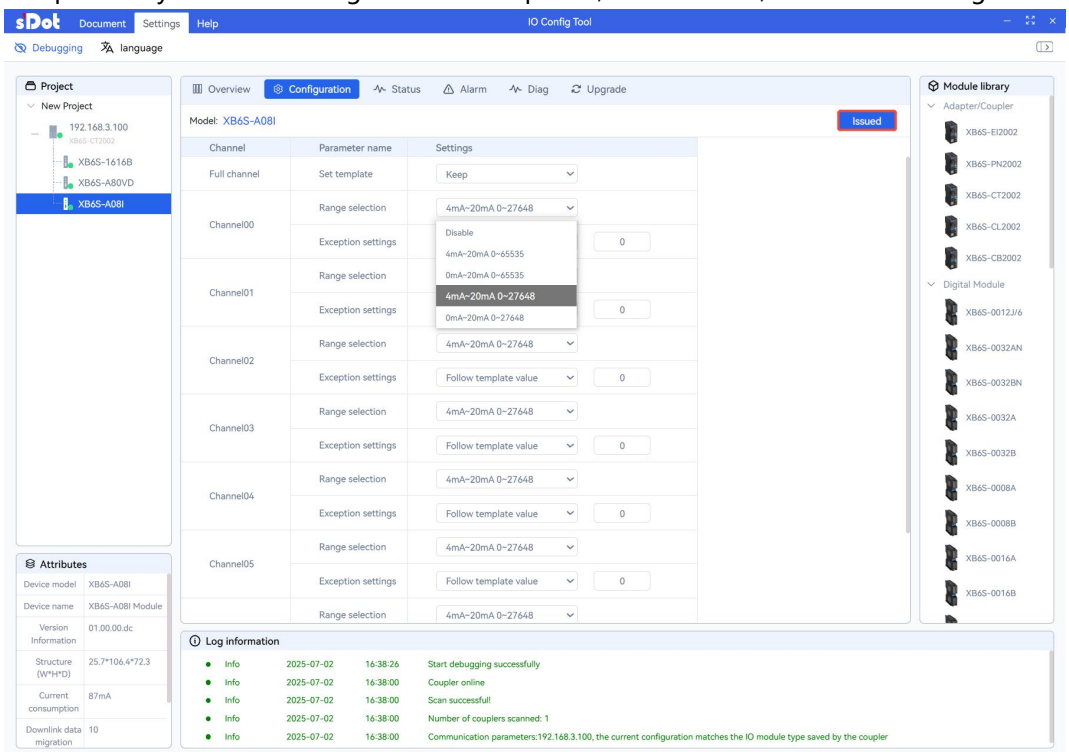

l. Analog output signal clear/hold function, all channels are in output clear mode by default, module channels can be configured separately, see the corresponding relationship 6.2.5 Clear/hold analog output signal. After the configuration is completed, click Send, as shown in the following figure.

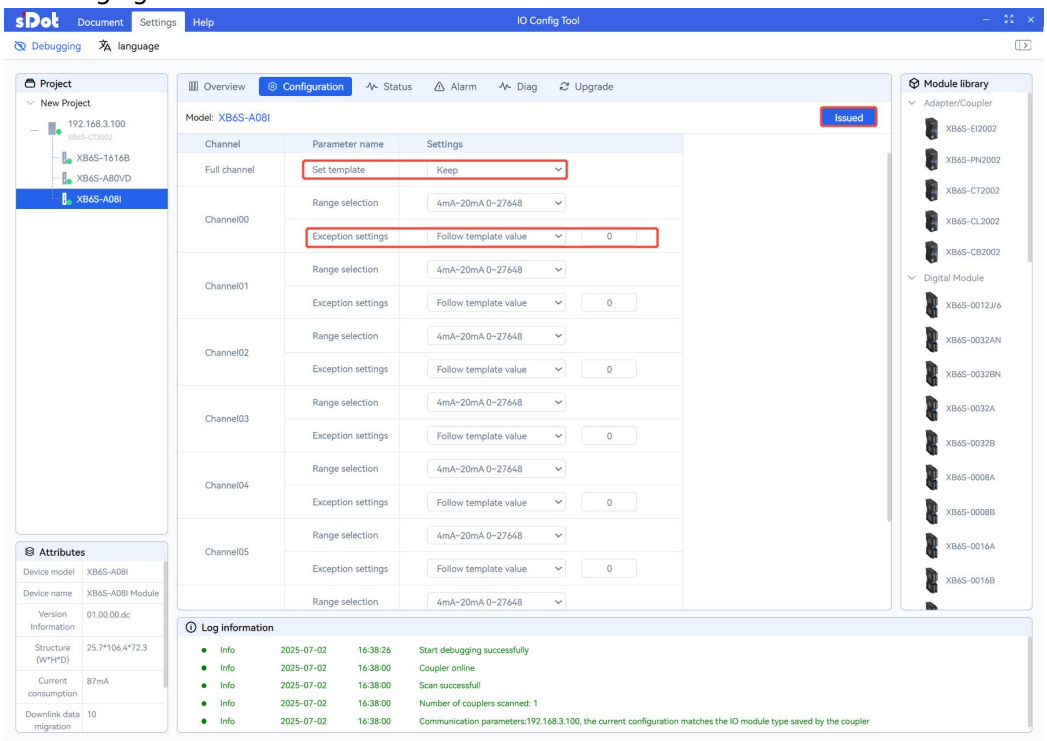

4、I/O function

a. In debug mode, click the XB6S-1616B module in the device overview page and click "Status", as shown in the following figure.

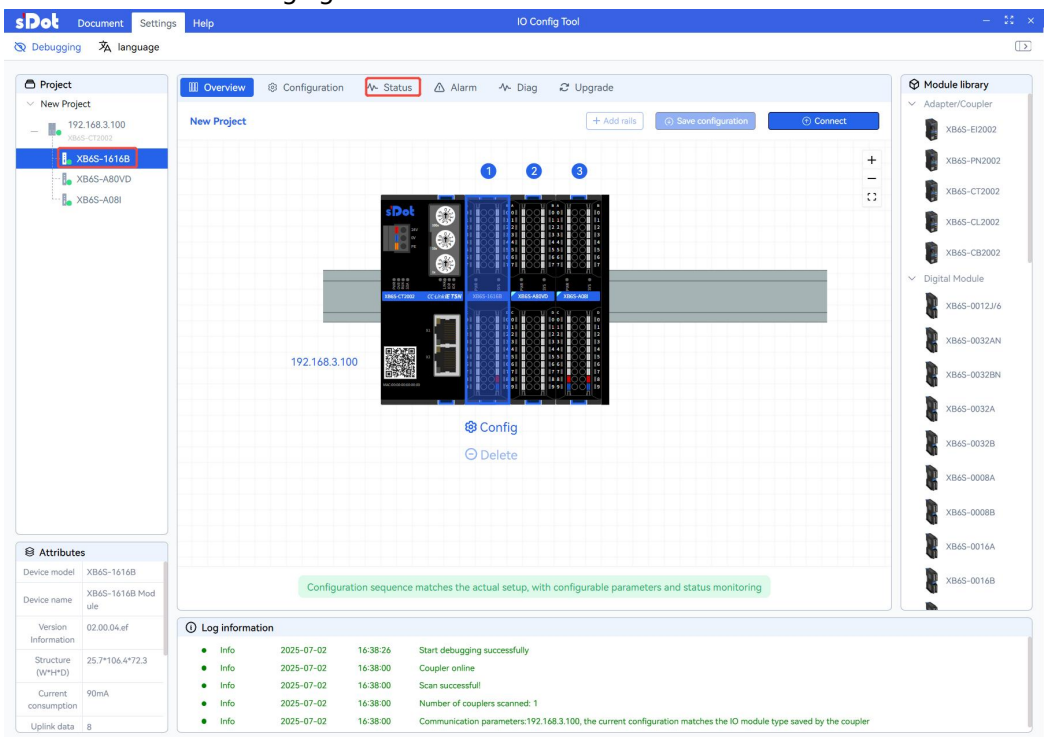

Note: Status monitoring must be performed in debug mode.

b. Take input channel 0 of the XB6S-1616B module as an example.Input channel 0 has valid voltage input, and the input value can be monitored in the status monitoring page, as shown in the figure below.

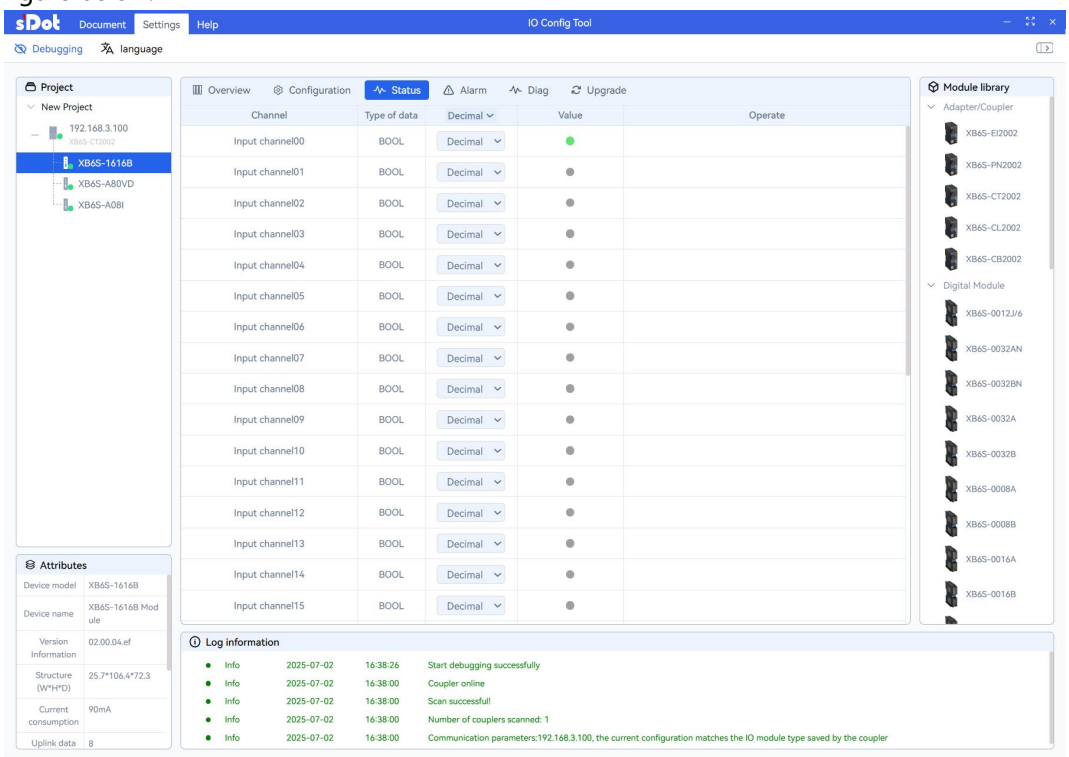

c. The output channel of the XB6S-1616B module can be forced to output through the "Operate" button, as shown in the figure below.

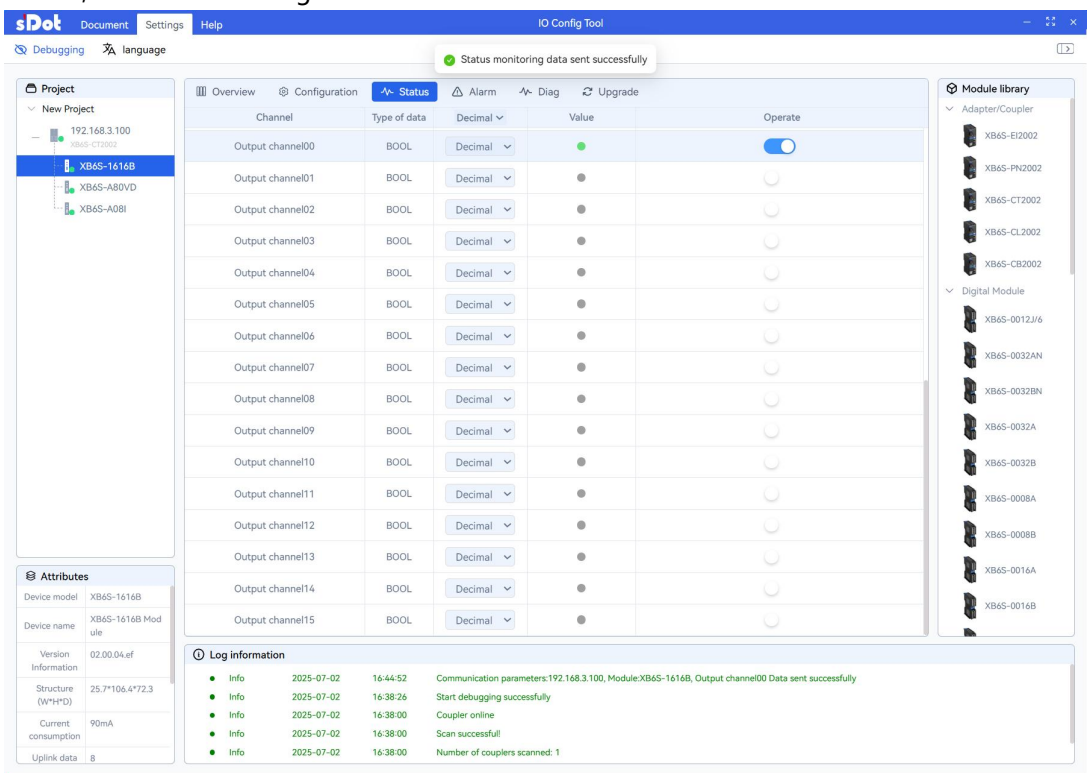

d. Select the XB6S-A80VD module in the left project column, switch to the status monitoring page of the XB6S-A80VD module, and monitor the input voltage code value of each channel., as shown in the figure below, the corresponding relationship between code value and voltage is detailed in 3.3.4 and 3.3.5 Analog Parameters.

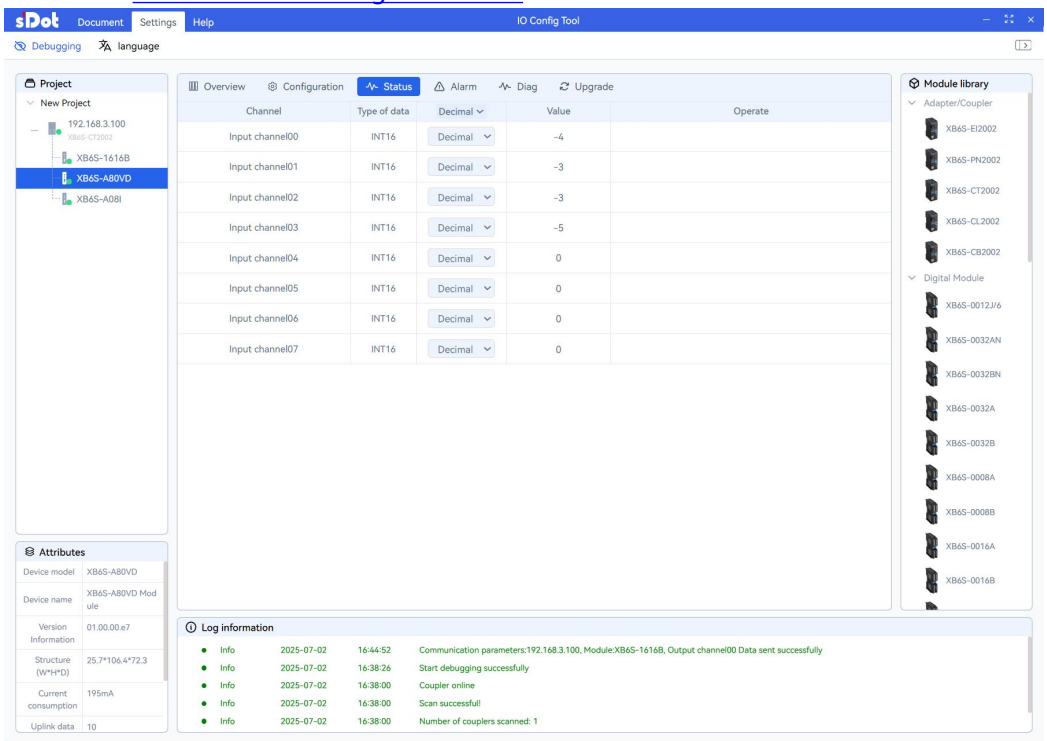

e. Select the XB6S-A08I module in the left engineering column, switch to the status monitoring page of the XB6S-A08I module, and write the current code value to force output for each channel., as shown in the figure below, the corresponding relationship between code value and current is detailed in 3.3.4 and 3.3.5 Analog Parameters.

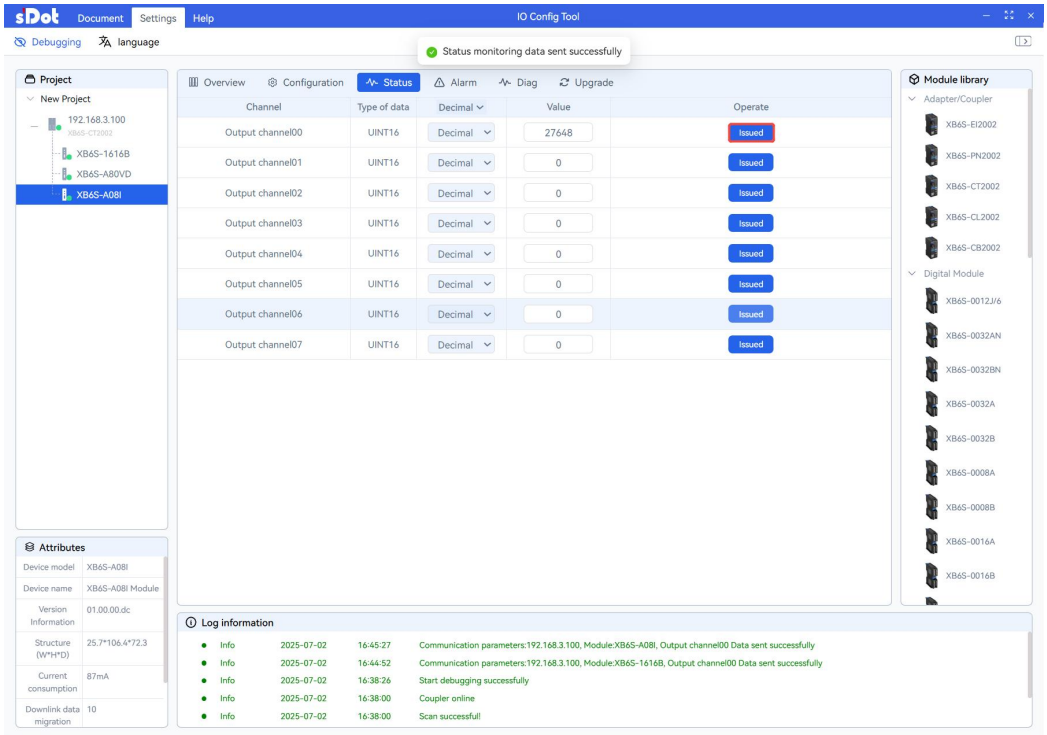

5、Topology status comparison function

a. Click "Save Configuration" to save the current topology status, as shown in the figure below.

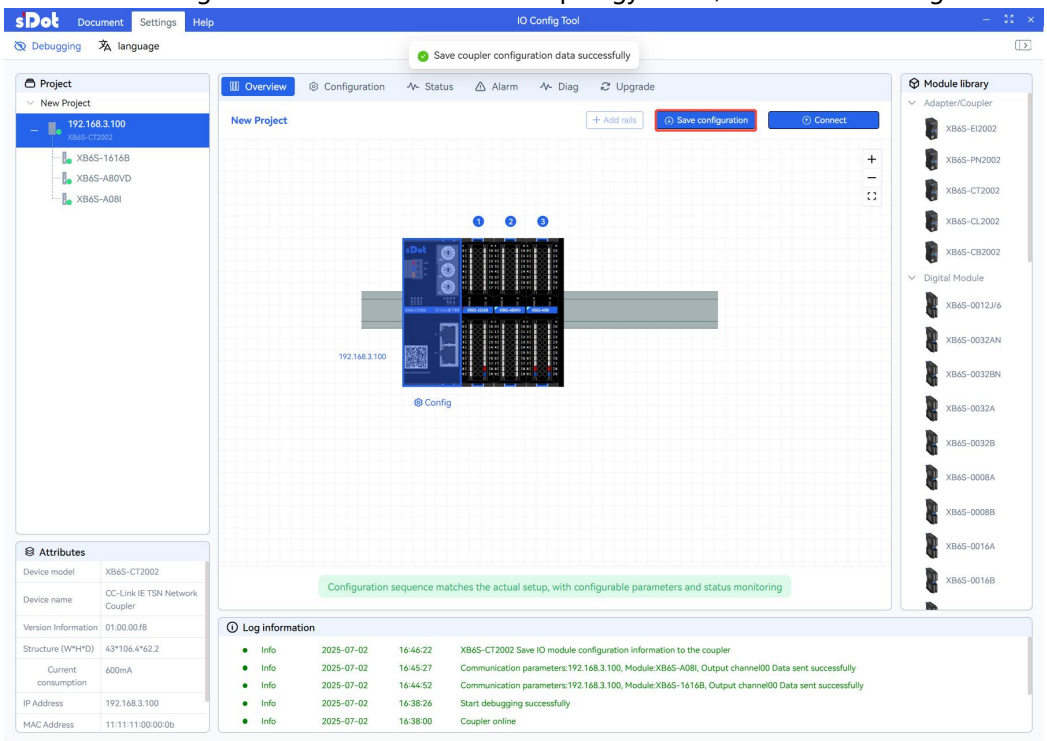

b. When the topology changes, after power-on scanning, you can view the topology status comparison prompt in the log information window, as shown in the figure below.

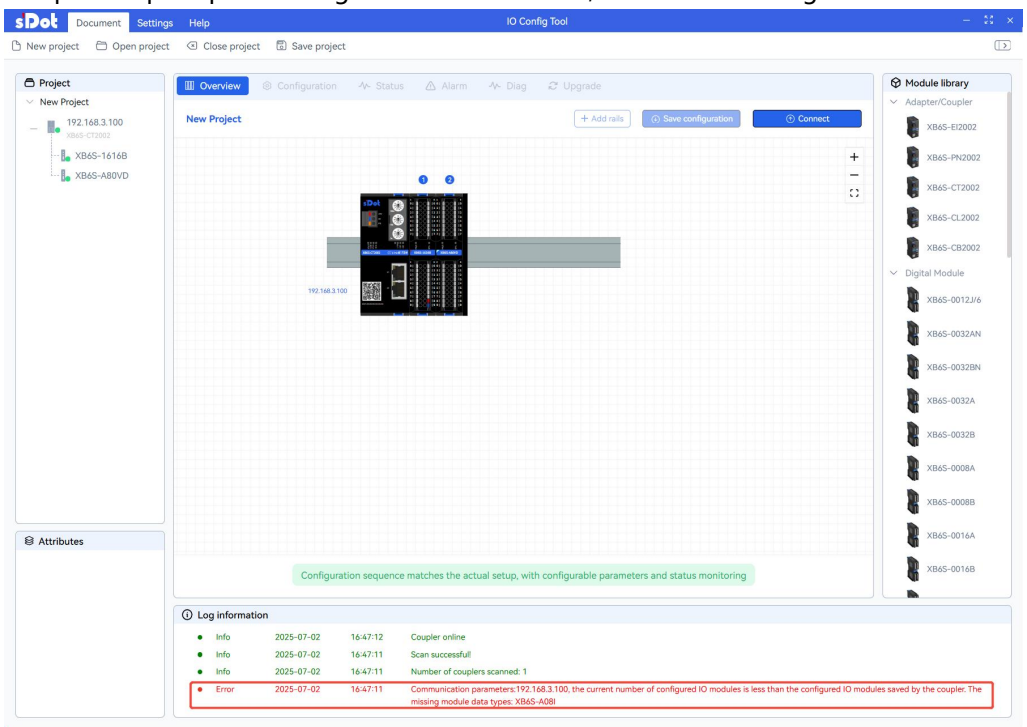

6、Diagnostic Information View

a. Click "Diag" to enter the diagnostic information page, and click the "Diagnosis" button to view the device running time, as shown in the following figure.

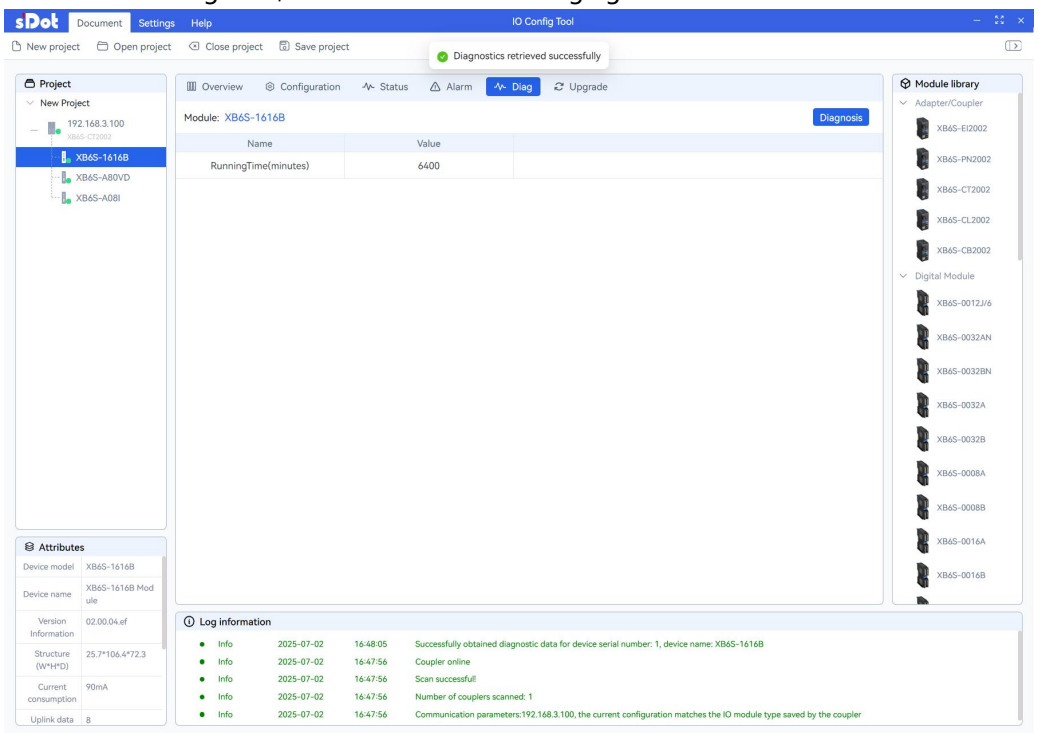

7、View alarm information

a. You can view the module's alarm information on the log information or alarm information page, as shown in the figure below.

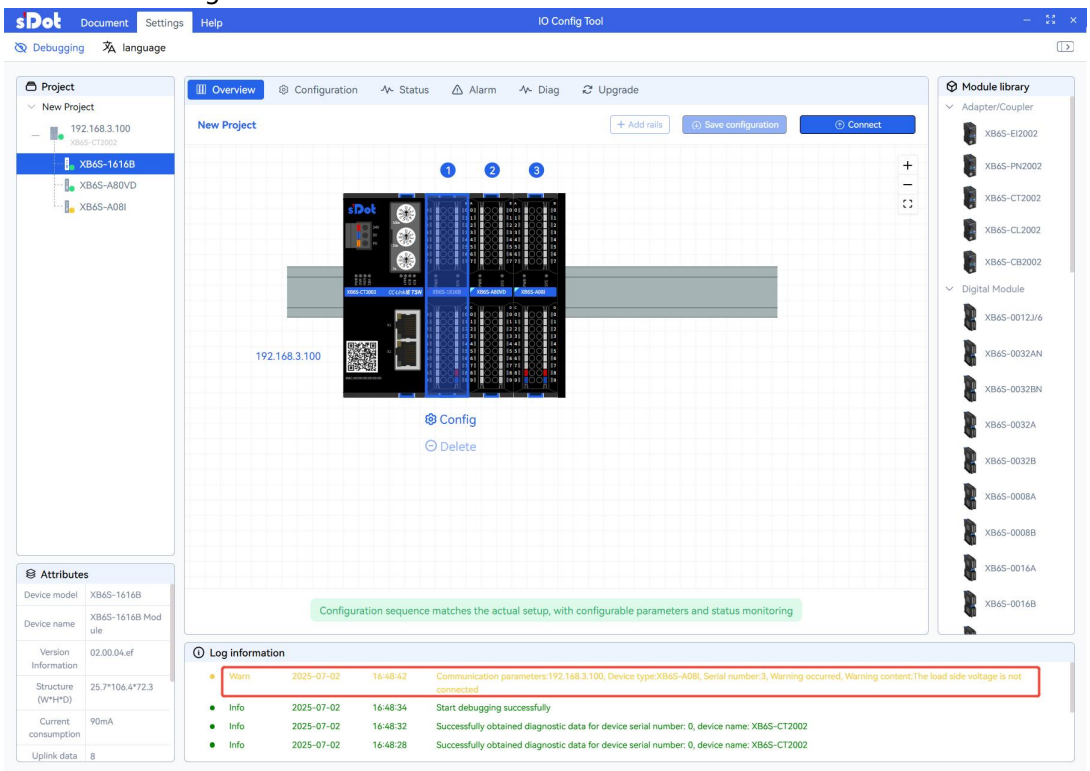

6.6 Firmware online upgrade

1、 Take IO Config Tool software as an example. The topology is XB6S-CT2002+XB6S-1616B. Switch to debug mode and enter the firmware update page, as shown in the following figure.

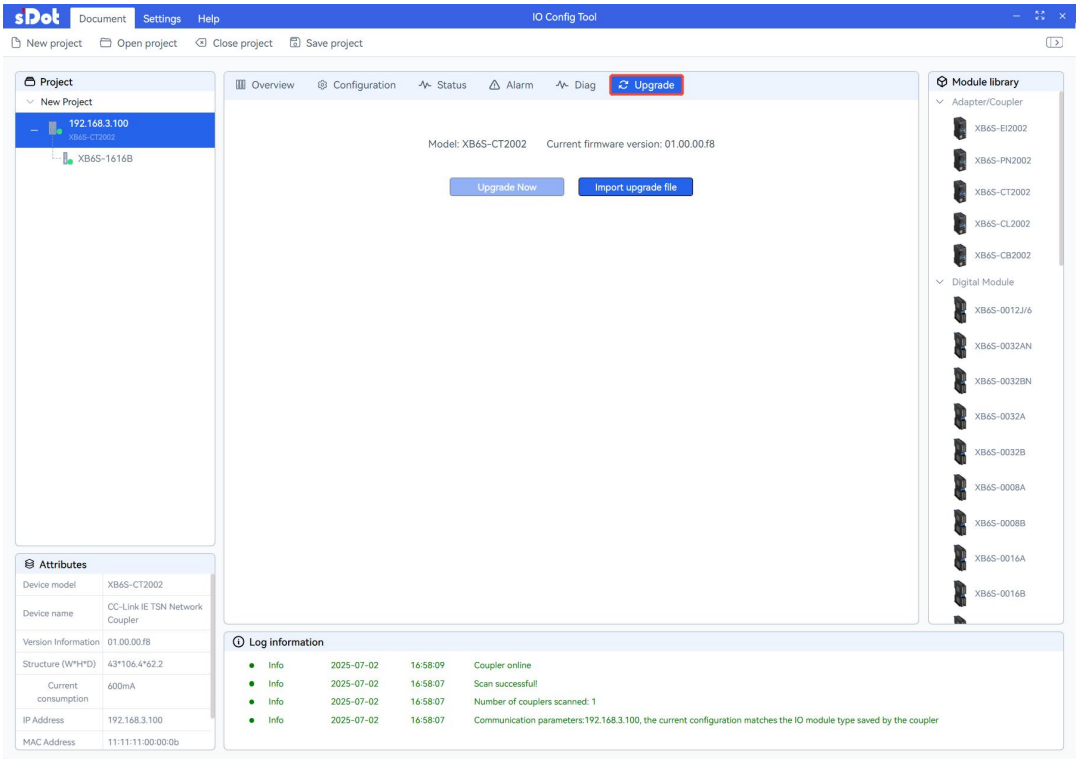

2、 To upgrade the coupler XB6S-CT2002, click "XB6S-CT2002" in the project column on the left, and click "Import Upgrade File", as shown in the figure below.

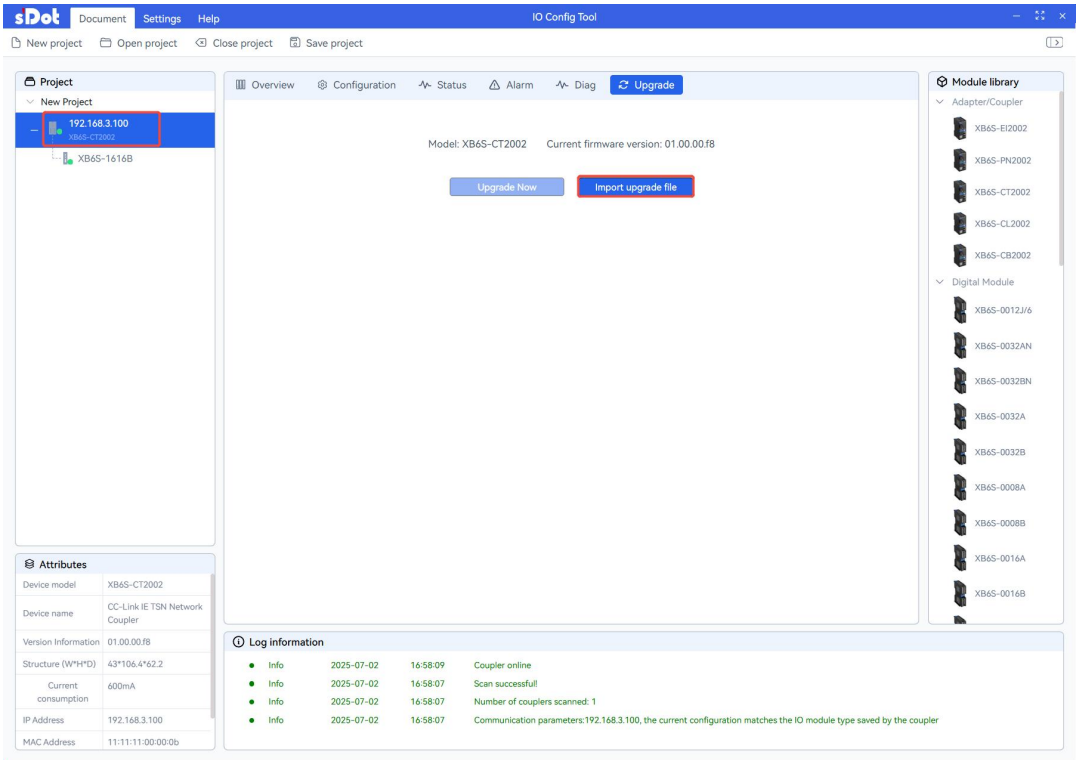

3、 The open file window pops up, select the "All Files" option, select the bin file corresponding to the module to be upgraded, and click "Open", as shown in the figure below.

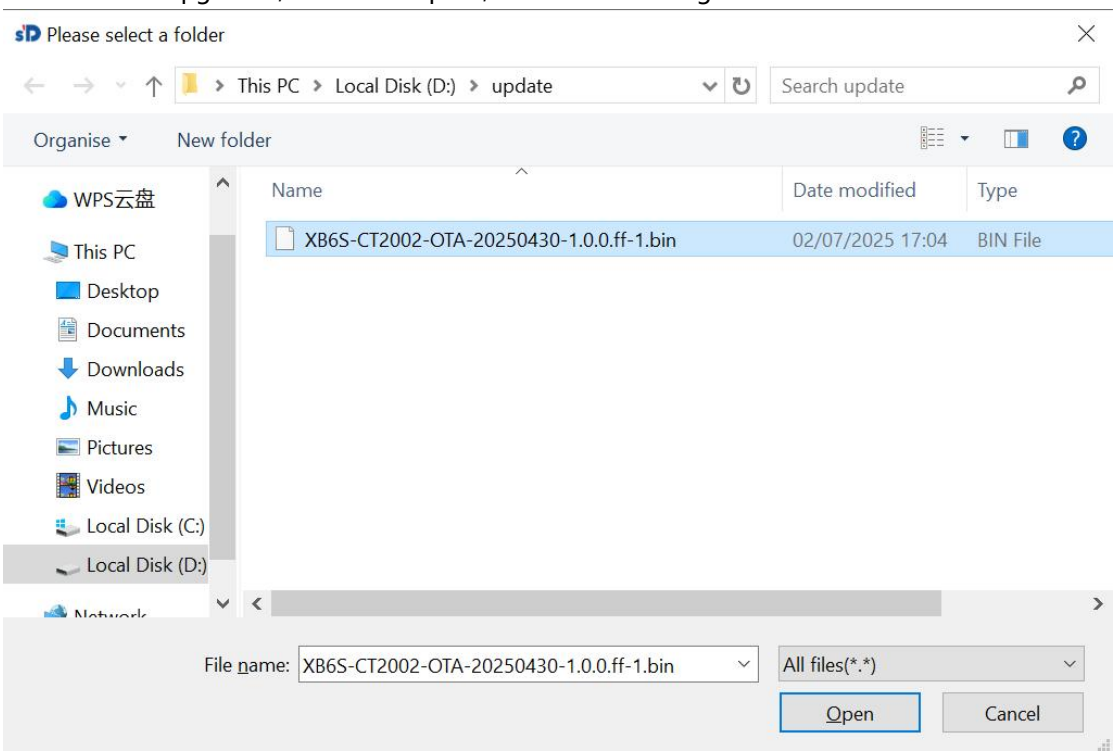

4、 After the upgrade file is successfully imported, click "Upgrade Now", as shown in the figure below. Note: During the upgrade process, other buttons in the software cannot be clicked.

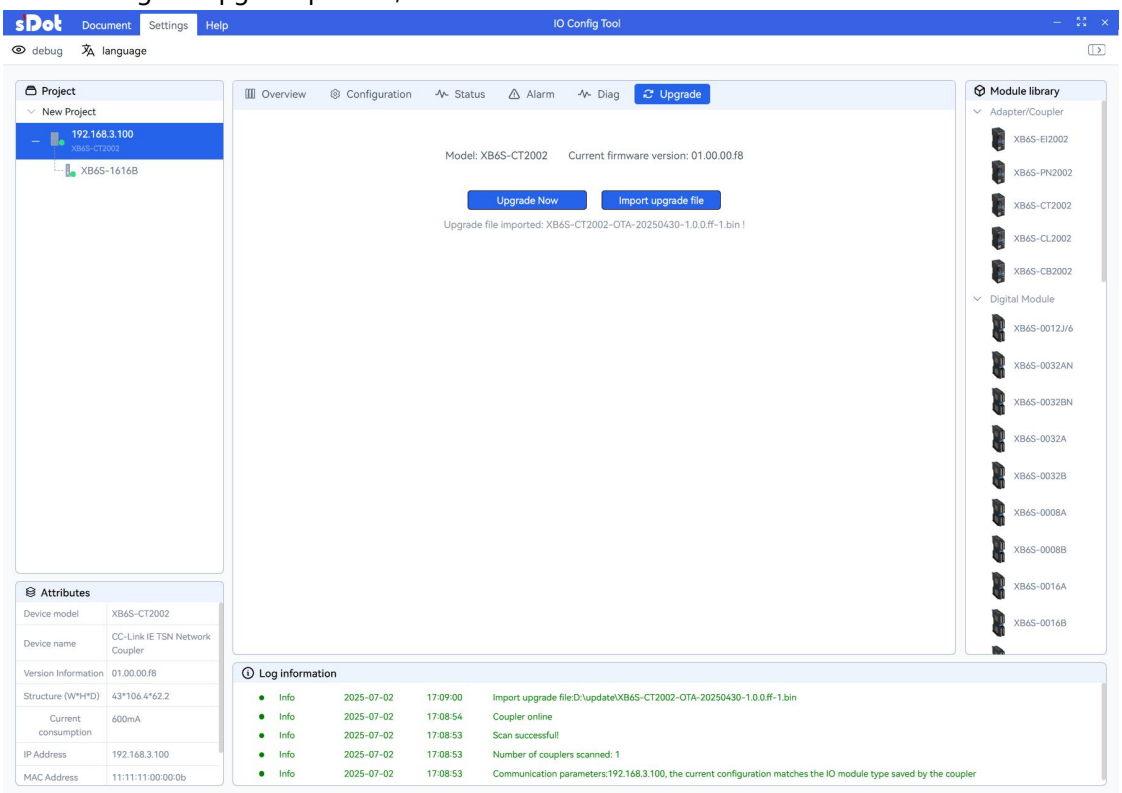

5、 Successful upgrade process of different modules

CC-Link IE TSN coupler online upgrade:

1) When the progress bar is full, the coupler IOR starts flashing at 10Hz (50ms on and 50ms off);
2) IOR changes from 10Hz flashing to 1Hz flashing. During the 1Hz flashing period, wait for 3 minutes.
3) Re-power the module and re-scan the module using the host computer.
4) If the coupler module can be scanned normally and the software version number is the updated version, the upgrade is successful.

IO module online upgrade:

1) When the progress bar is full, the coupler IOR and the SYS of the module being upgraded start flashing at 10Hz (50ms on and 50ms off);
2) The SYS indicator of the module being upgraded changes from 10Hz to off, indicating that the upgrade is successful (after the upgrade is complete, the power needs to be turned on and off again to connect normally);
3) You can continue to upgrade other modules without cutting off the power supply.

